HVAC & Refrigeration Systems for Marine and Offshore

TEKNOTHERM

MARINE HVAC

PRODUCT CATALOGUE

DAMPERS

INDOOR CLIMATE IS OUR STENGTH

TEKNOTHERM
MARINE HVAC

- ✓ **Teknotherm Marine HVAC is strong and dynamic company which is perceived as a reliable and competent wide range marine and offshore air condition, ventilation, refrigeration systems supplier.**
- ✓ **We meet current and future requirements of our customers and their satisfaction is the most important aim for us.**
- ✓ **Realization of project around the world, from Germany through Norway and Russia to China, has given us irreplaceable and valuable experience.**
- ✓ **Our offer includes providing complete documentation and technical assistance during design stage, equipment installation, commissioning supervision and after-sales service.**
- ✓ **Teknotherm Marine HVAC has established and maintains a Quality Management System relevant for design, delivery, technical consulting and installation of air conditioning, ventilation and refrigeration systems for sea vessels and offshore units according to ISO 9001:2008.**

73-13 DAMPERS

CONTENT PAGE

1. REGULATING DAMPER – DARL 4
2. REGULATING DAMPER – DASL....5
3. REGULATING DAMPER – DATL/DAT 6
4. REGULATING DAMPER – DSQW 7
5. ADJUSTMENT AND MEASUREMENT DAMPER – PRA....9
6. AIR FLOW DAMPER – UTK 11
7. AIR FLOW DAMPER – UTT....14
8. MARINE VENTILATION ADJUSTING DAMPERS – LDA....17
9. A0 (A60) FIRE AND GAS DAMPER – FDB2 18
10. A0 (A60) FIRE AND GAS DAMPER – FDD 21
11. A0 (A60) FIRE DAMPER – FDA....23
12. H0 (H120) FIRE DAMPER – FEX 25
13. SHUT-OFF, BALANCIN AND GAS DAMPER – UTG 28
14. CIRCULAR CUT-OFF DAMPER – CFD 30
15. RECTANGULAR CUT-OFF DAMPER – RFD....32
16. CUT-OFF DAMPER – GFD 34
17. SMOKE DAMPER – SD....36
18. NON-RETURN DAMPER – BLD....37
19. PRESSURE RELIEF DAMPER – BRD 39
20. NON-RETURN FLAPS – NRV 41
21. BACK DRAUGHT DAMPER – DAOSL....42

DESCRIPTION

The DARL regulating damper with EPDM gasket on flange is designed to admit an insulation thickness of up to 50mm. The damper blade can be adjusted on the shaft within a range of 0° to 90°. The blade can be locked using a screw.

DIMENSIONS

ØD [mm]	Weight [kg]	ØD [mm]	Weight [kg]
80	0.40	280	1.30
100	0.46	300	1.45
125	0.55	315	1.50
140	0.60	355	2.00
150	0.65	400	2.40
160	0.70	450	3.50
180	0.75	500	4.00
200	0.80	560	4.60
223	0.90	600	5.00
250	1.10	630	5.40

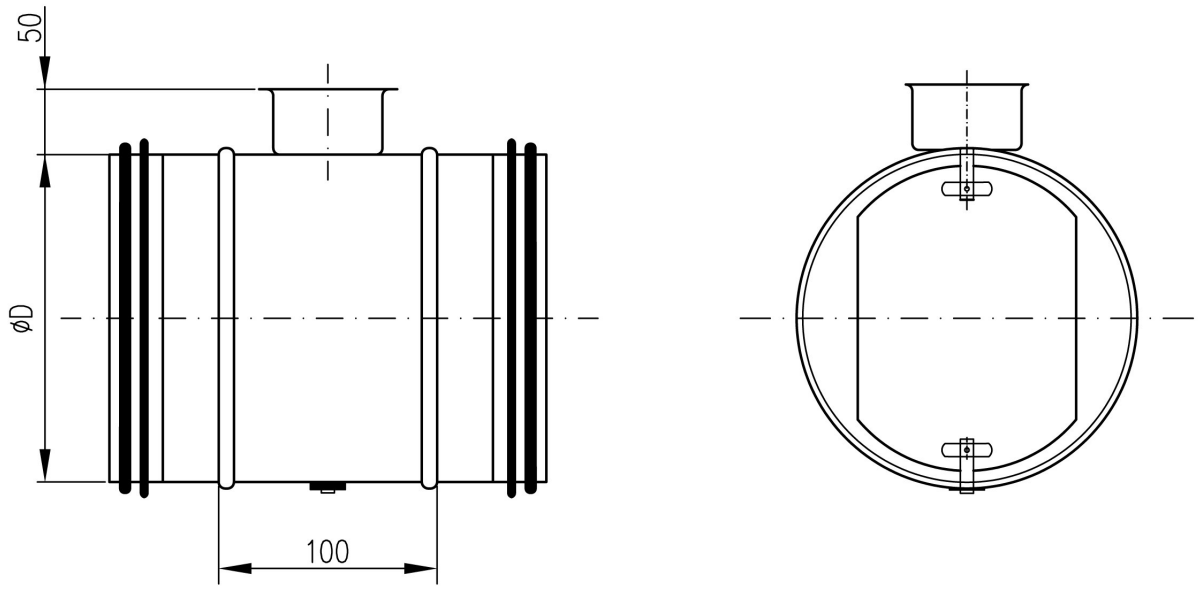

DESCRIPTION

The DASL damper is equipped with EPDM gasket on flange. It is designed so as to admit an insulation thickness of up 50mm. This damper is applicable wherever completely airtight shut-off is not required. The unit's blade can be adjusted on the handle within a range of 0° to 90°. The blade can be locked using a screw.

DIMENSIONS

ØD [mm]	Weight [kg]	ØD [mm]	Weight [kg]
80	0.40	280	1.40
100	0.45	300	1.50
125	0.55	315	1.60
140	0.60	355	2.00
150	0.62	400	2.60
160	0.70	450	3.50
180	0.75	500	4.00
200	0.80	560	4.80
223	0.90	600	5.20
250	1.20	630	5.70

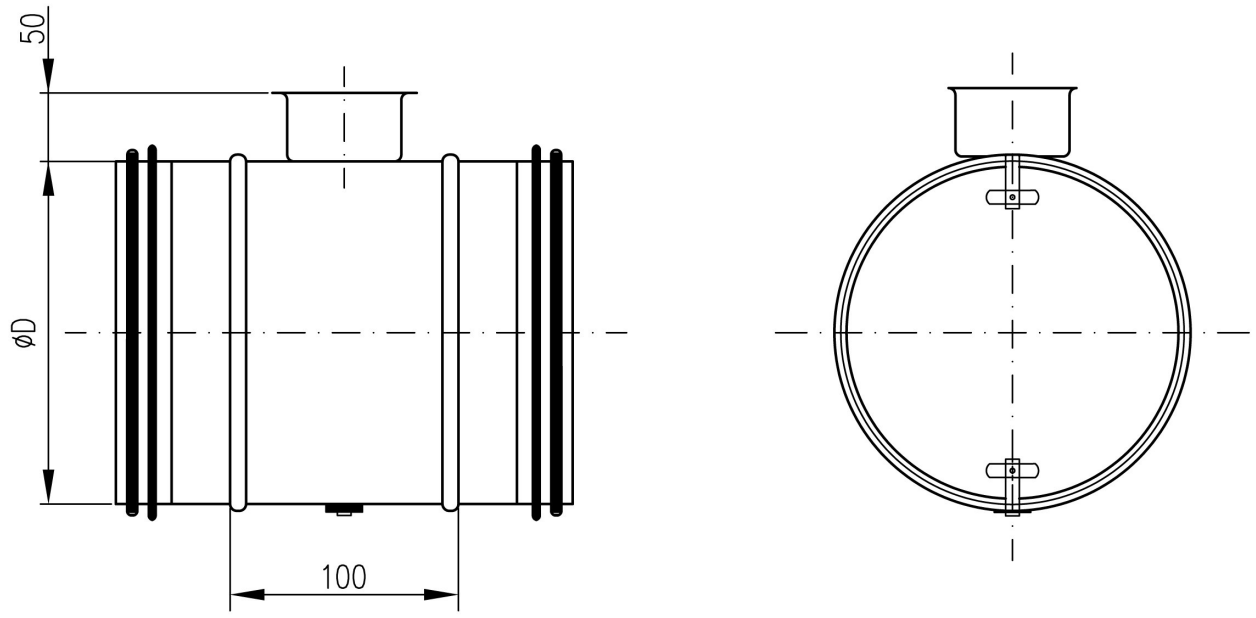

DESCRIPTION

The DATL/DAT damper is designed to admit an insulation thickness of up to 50mm. This damper is applicable wherever completely airtight shut-off is required. The damper blade can be adjusted on the handle within a range of 0° to 90°. The blade can be locked using a screw. The DAT type is an airtight shut-off damper and the DATL has got aditionaly gaskets on flanges.

DIMENSIONS

ØD [mm]	Weight [kg]	Torque [Nm]	ØD [mm]	Weight [kg]	Torque [Nm]
100	0.50	1.0	300	1.40	2.0
125	0.55	1.0	315	1.50	2.0
140	0.60	1.0	355	1.90	4.0
150	0.65	1.0	400	2.50	6.0
160	0.70	1.0	450	3.50	7.0
180	0.75	1.0	500	4.00	8.0
200	0.80	1.0	560	4.60	9.0
224	0.90	1.5	600	5.00	10.0
250	1.10	1.5	630	5.40	10.0
280	1.30	2.0			

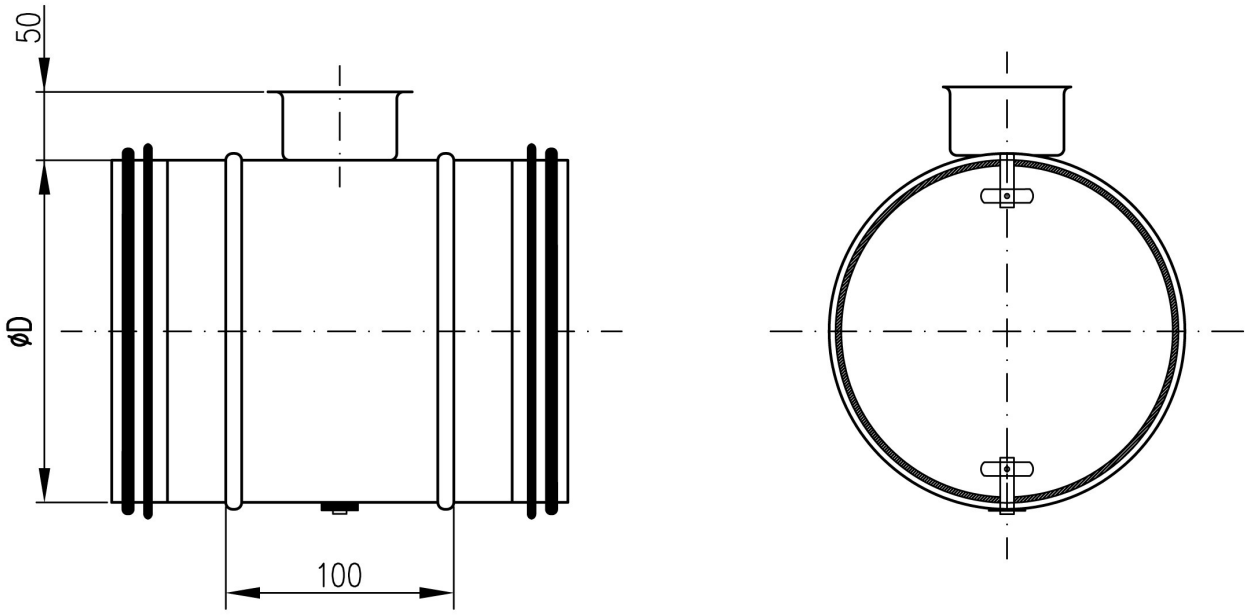

DESCRIPTION

The DSQW multi-blade damper is used to control or shut off the air flow in ventilation ducts. It can be built into an air conditioning station or mounted on the wall. Damper's temperature range is from -20°C to 80°C. The damper consists of aluminum blades and a housing accommodating four galvanized steel profiles closed with PQ mounting frames. The blade height is identical for each damper size. This damper can be operated manually, driven by an external servomotor installation. If dimension B lies within 1000-2000 and A≥1000, two manual control mechanism are provided. Dampers are split when A≥1400. Damper adjustments are carried out using gears driven manually or by servomotor. The drive mechanism is placed outside the damper. The blade rotation mechanism consists of a short axle, a long axle and gears mounted on bearings. The gears are located outside the damper.
The PQ profile is made of galvanized steel sheet and used for joining rectangular ducts. It is mounted directly on the bare end of the duct and the fitting. Depending on the dimensions and pressure of ducts, three profile seizes are available. The profile can be made of acid-proof material or aluminum.

TECHNICAL SPECIFICATION & DIMENSIONS

Pressure [Pa]	Dimension of profile A or B [mm]				
	<500	500-1000	1000-1600	1600-2500	2500
200	PQ20	PQ20	PQ30	PQ30	PQ40
400	PQ20	PQ20	PQ30	PQ30	PQ40
600	PQ20	PQ20	PQ30	PQ30	PQ40
800	PQ20	PQ20	PQ30	PQ30	PQ40
1000	PQ20	PQ20	PQ30	PQ30	PQ40
1200	PQ20	PQ30	PQ30	PQ40	PQ40
1500	PQ20	PQ30	PQ30	PQ40	PQ40

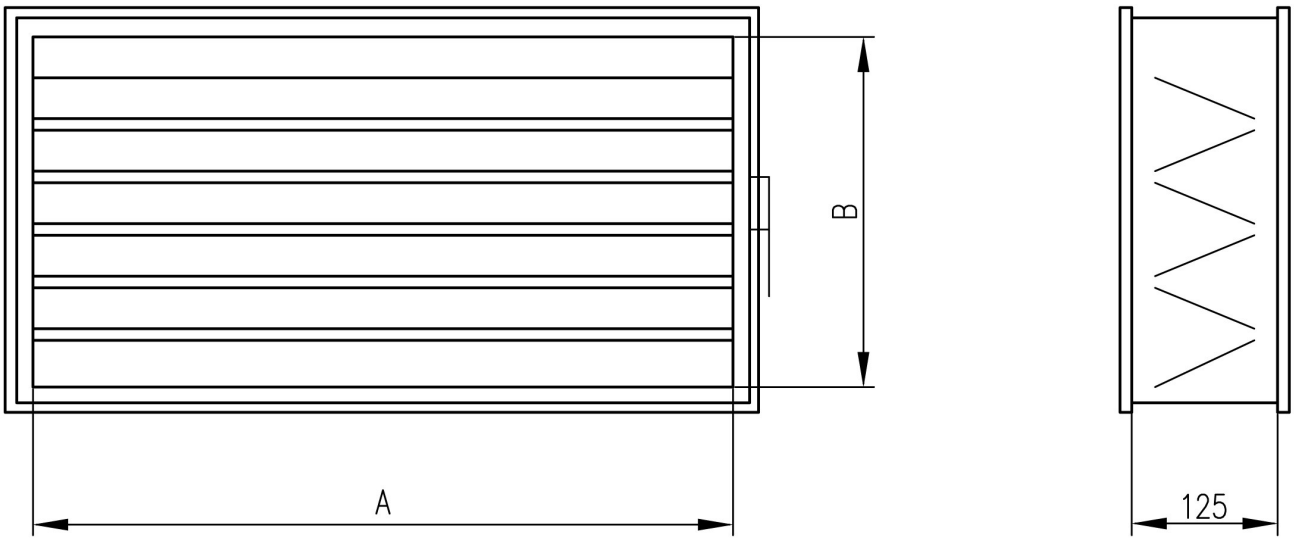

PQ profile

Type	Dimensions [mm]			Weight [Kg/mb]
	H	L	G	
PQ20	25	20	0.7	0.55
PQ30	25	30	0.8	0.71
PQ40	30	40	0.9	1.11

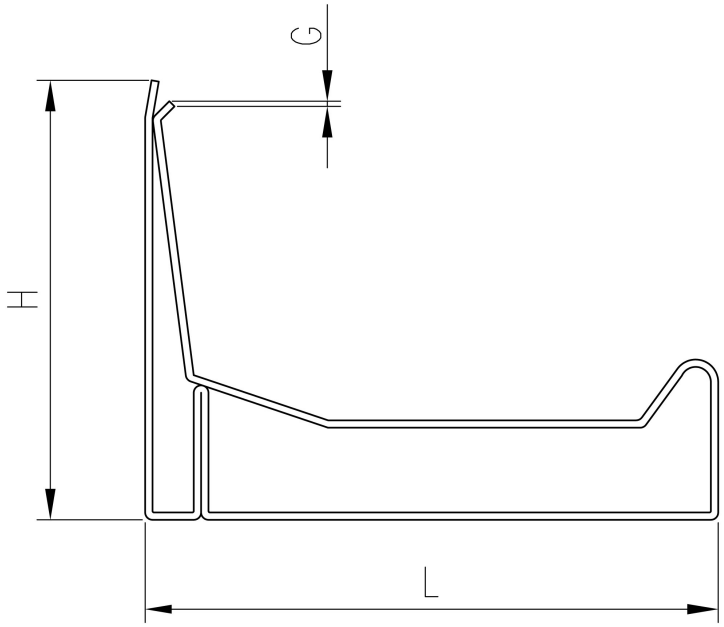

DESCIPTION

The volume control damper is installed in HVAC systems where is necessity for adjustment of the air flow to achieve the correct supply – or exhaust air quantities in the different areas served by the system. The damper provides the possibility to measure actual air volume in the duct where it is installed. The unit has a manual adjustment. Accurate air flow measurement is based on flow nozzle principle. Sound generation is minimized due to conical adjustment section. The operation temperature range of the unit is from -30°C to 70°C. The PRA damper is equipped in self-locking adjustment mechanism; position can be ensured with locking screw. Duct cleaning is enabled through the unit up to size 315. PRA unit is integrated with cleaning access panel. Inlet and outlet spigots of this unit are equipped with integral rubber gaskets. The classification of casing leakage is in accordance with the EN1751 class C. The airflow rate is adjusted by turning the adjustment knob in order to change the aperture size of the adjustment cone formed by iris blades. Once the opening area is reduced, the airflow rate decreases and the total pressure loss caused by the device increases. The airflow can be determinate by measuring the differential pressure in the measurement taps.

Model	Description
PRA 100…315	The operating mechanism is positioned partly outside the device and between the adjustment cone and casing. The unit can be cleaned with normal duct sweeping equipment when the device is fully opened.
PRA 350…1000	The operating mechanism is located partly outside the device and inside the adjustment cone. The device can be cleaned with normal duct sweeping equipment, when the device is fully opened and the cleaning equipment is passed carefully through the operating mechanism.
Supply air jet nozzle PRA/S	The PRA-unit can also be used as a supply air nozzle in e.g. industrial spaces.

TECHNICAL SPECIFICATION & DIMENSIONS

- material casing and blades: galvanized steel
- material operating mechanism: ABS and PBT plastic (sizes 100 to 315); steel (sizes 350 to 1000)
- material duct gaskets: 1C-polyurethane hybrid
- material measurement taps: polyurethane

D [mm]	q_{min}		q_{max}		Dimension [mm]	
	l/s	m^3/h	l/s	m^3/h	ØD	H
100	8	28	47	170	99	-
125	12	44	74	265	124	-
160	20	72	121	434	159	-
200	31	113	188	679	199	-
250	49	177	295	1060	249	-
315	78	281	468	1683	314	-
350	96	346	577	2078	349	70
400	126	452	754	2714	399	70
500	196	707	1178	4241	499	70
630	312	1122	1870	6733	629	70
800	503	1810	3016	10857	799	70
1000	785	2827	4712	16965	999	85

PRA 100…315

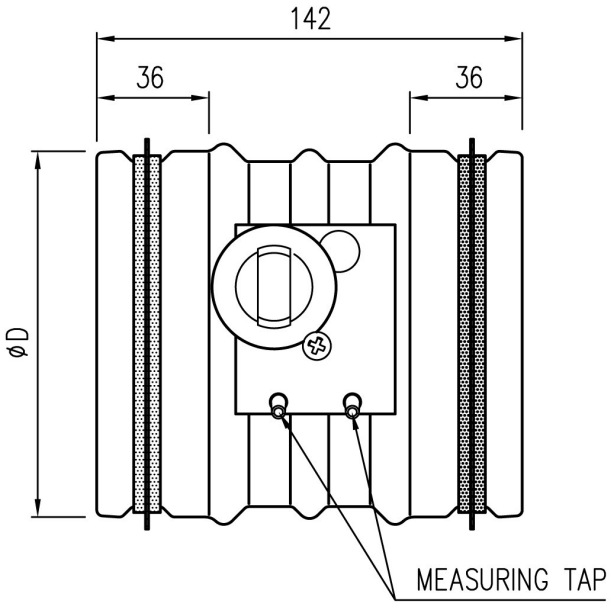

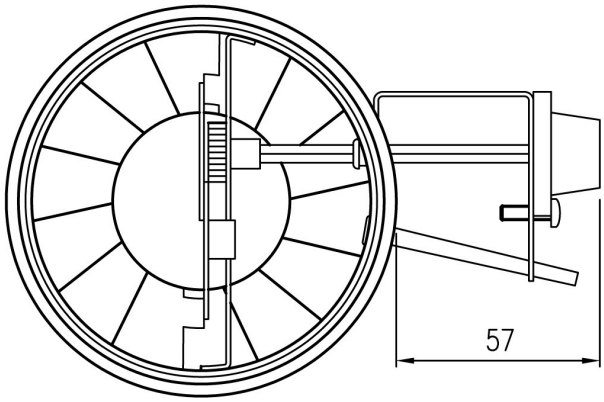

PRA 350…1000

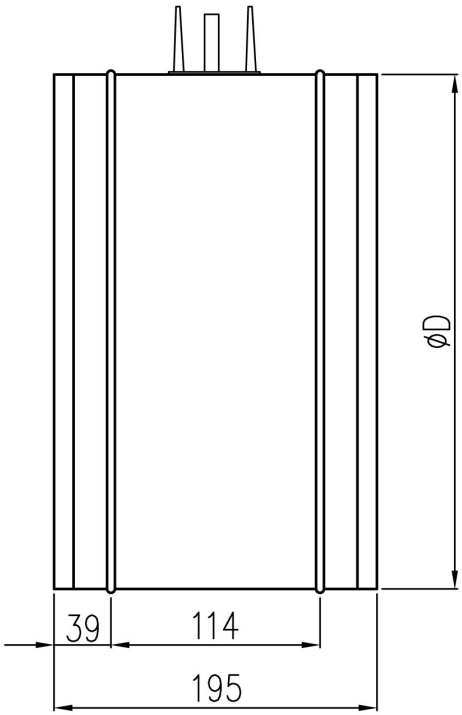

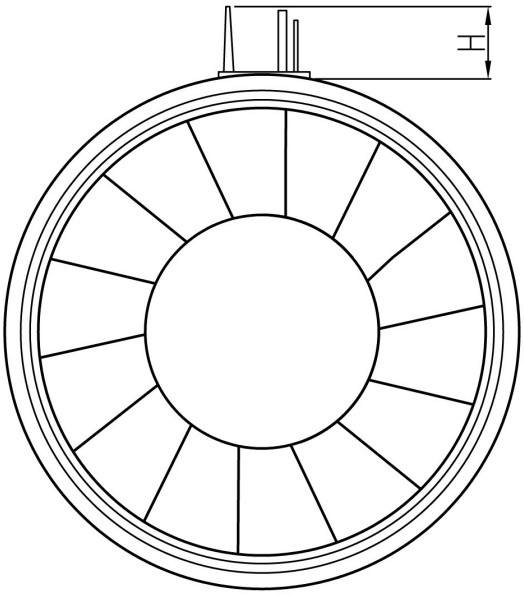

DESCRIPTION

The volume control damper is installed in a HVAC system where needed for adjustment of the air flow to achieve the correct supply or exhaust air quantities in the different areas served by the system. The rectangular volume control damper consists of one or several movable damper blades, mounted in a galvanized steel frame with flanges. Its temperature operation range is up to 100°C (optionally up to 200°C). The UTK dampers are used to shut off, adjust or control airflow in ductwork in applications where damper leakage does not have significant importance. In the closed position the UKT damper leakage class is 1 in accordance with the EN1751 standard.

TECHNICAL SPECIFICATION & DIMENSIONS

- material casing: galvanized steel (stainless steel AISI 316 also available)
- material blades: galvanized steel (stainless steel AISI 316 also available)
- material blade gaskets: silicon (heat-proof model: LTE rubber)
- material duct gasket: rubber compound (circular connection)
- material slide bearings: alloy of polyamide and molybdenum sulphide (self-lubricated heat-proof model stainless steel AISI 316 also available)
- material drive shaft: galvanized steel

Standard frame material thickness is 1mm.

Circular connection

Dimension [mm]		Weight [kg]		Dimension [mm]		Weight [kg]	
D1/D2 ØD	BxH	UTK D1	UTK D2	ØD	BxH	UTK D1	UTK D2
100	150x150	-	-	400	400x400	9	11
125	150x150	-	-	500	500x500	12	15
160	200x200	4	4	630	600x600	16	21
200	200x200	4	5	800	800x800	23	30
250	250x250	5	6	1000	1000x1000	32	42
315	300x300	7	9	1250	1250x1250	51	66

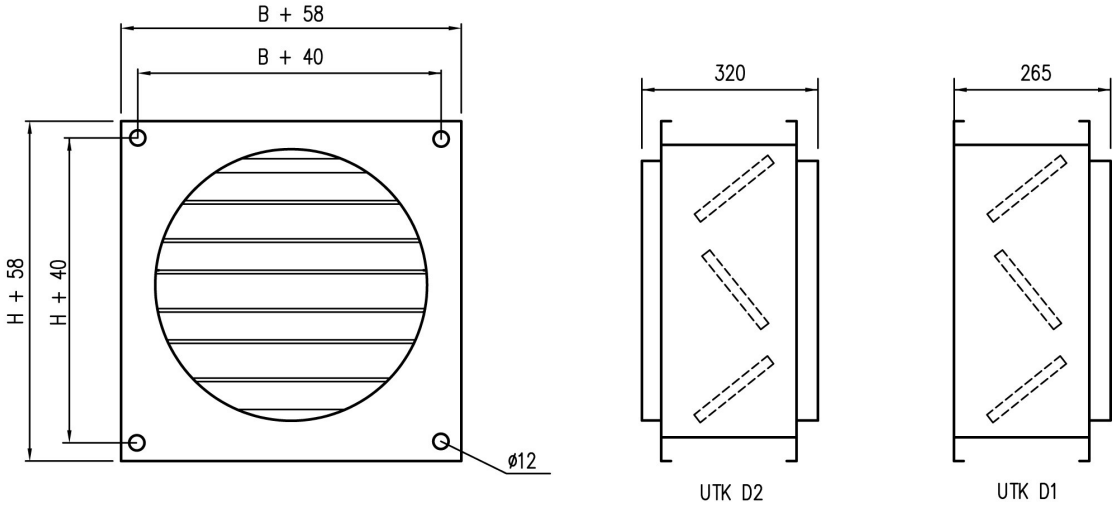

Weights [kg] of standard UTK dampers without actuator

H (height) [mm]	B (width) [mm]											
	100	200	300	400	500	600	700	800	900	1000	1100	1200
200	3	3	4	5	6	6	7	8	8	9	10	16
300	4	5	6	6	7	8	9	9	10	11	12	18
400	5	5	6	7	8	9	10	10	11	12	13	20
500	5	6	7	8	9	10	11	12	13	14	15	21
600	6	7	8	9	10	11	12	13	14	15	17	23
700	7	8	9	9	11	12	13	15	16	17	18	25
800	7	9	10	11	12	14	15	16	18	19	20	27
900	8	9	11	12	13	15	16	18	19	20	22	29
1000	9	1	12	13	15	16	18	19	21	22	24	31
1100	9	11	13	14	16	17	19	20	22	24	25	32
1200	10	12	14	15	17	19	20	22	24	25	27	35
1300	11	13	14	16	18	20	22	23	25	27	29	36
1400	12	14	16	17	19	21	23	25	27	29	31	38
1500	12	14	16	18	20	22	24	26	28	30	32	40
1600	13	15	17	20	22	24	26	28	30	32	34	42
1700	14	16	18	20	23	25	27	29	31	34	36	44
1800	15	17	19	22	24	26	29	31	33	35	38	46
1900	15	18	20	22	25	27	30	32	34	37	39	47
2000	16	19	21	24	26	29	30	34	36	39	41	49
2100	17	19	22	25	27	30	32	35	38	40	43	51
2200	18	20	23	26	28	31	34	37	39	42	45	53
2300	18	21	24	27	29	32	35	38	41	44	46	55
2400	19	22	25	28	31	34	37	40	42	45	48	57

H (height) [mm]	B (width) [mm]											
	1300	1400	1500	1600	1700	1800	1900	2000	2100	2200	2300	2400
200	17	17	18	21	21	22	23	25	26	27	27	28
300	20	20	21	24	25	26	26	29	30	31	32	32
400	21	22	23	26	27	27	28	31	32	33	34	35
500	23	24	25	28	29	30	31	34	35	36	37	38
600	25	26	27	31	32	33	34	37	38	39	40	41
700	27	28	29	33	34	35	36	40	41	42	43	44
800	29	31	32	35	37	38	39	43	44	45	47	48
900	31	33	34	38	39	40	42	45	47	48	50	51
1000	34	35	37	40	42	43	45	49	50	52	53	55
1100	35	37	39	42	44	46	47	51	53	54	56	58
1200	38	40	41	45	47	49	51	54	56	58	60	62
1300	40	41	43	47	49	51	53	57	59	61	63	65
1400	42	44	46	50	52	54	56	60	62	64	66	68
1500	44	46	48	52	54	56	59	63	65	67	69	71
1600	46	48	51	55	57	59	62	66	68	70	73	75
1700	48	50	53	57	59	62	64	69	71	73	76	78
1800	50	53	55	60	62	65	67	72	74	77	79	82
1900	52	55	57	62	65	67	70	74	77	79	82	85
2000	55	57	60	65	67	70	73	78	80	83	86	88
2100	56	59	62	67	70	72	75	80	83	86	89	91
2200	59	62	65	70	73	76	78	83	86	89	92	95
2300	61	64	67	72	75	78	81	86	89	92	95	98
2400	63	66	69	75	78	81	84	89	92	95	99	102

Rectangular connection

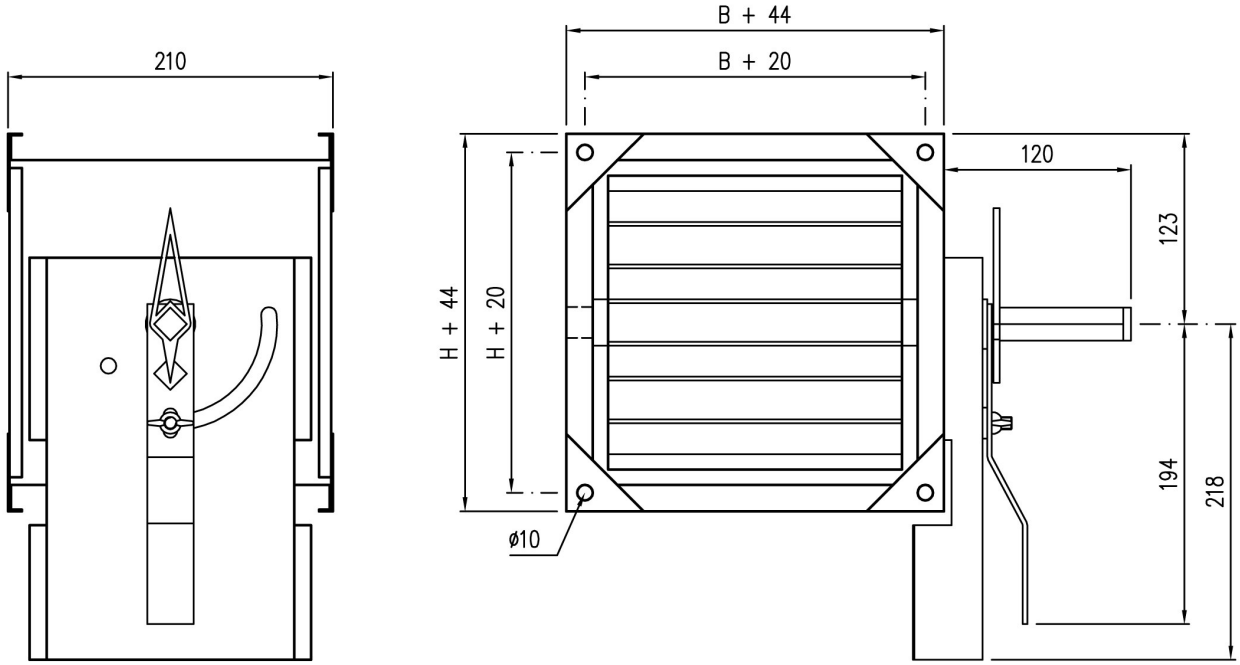

Flange connection

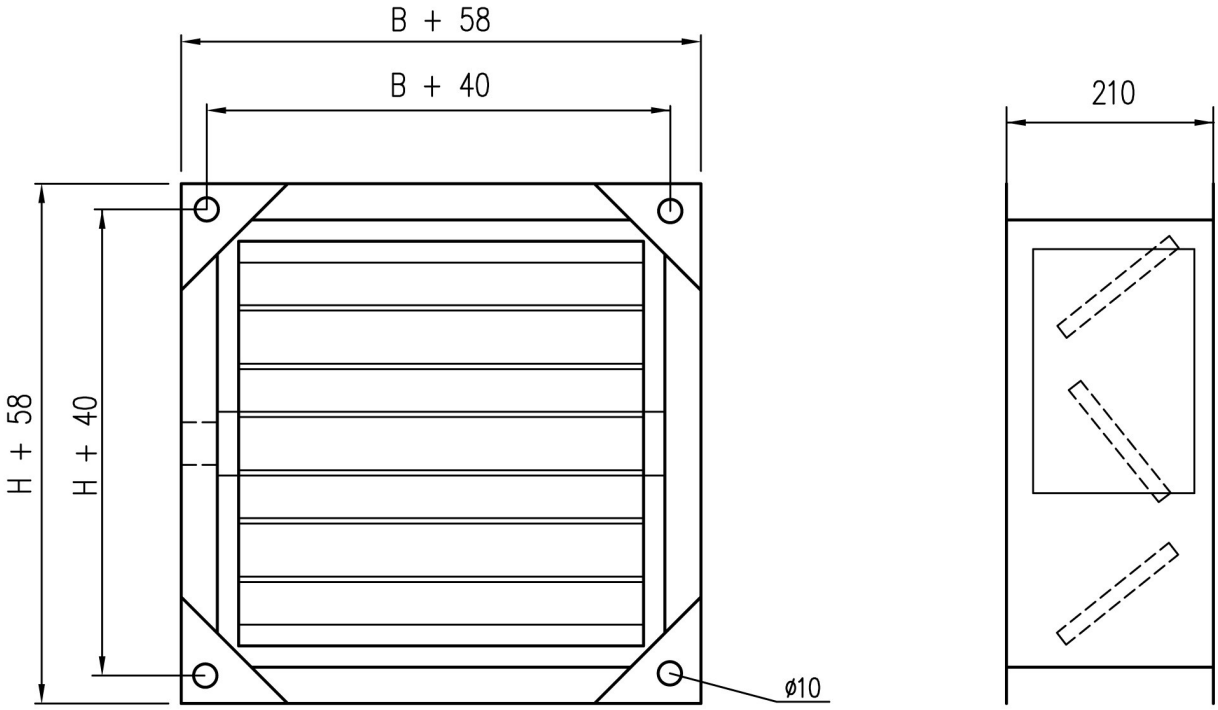

DESCRIPTION

The UTT unit is shut-off and balancing type of damper for outdoor air intake and exhaust air with opposed blade design. Blades comprise thermal insulation. Tightness in closed position fulfils EN1751 class 4 requirements. Its temperature operation range is up to 100°C (optionally up to 200°C). The UTT dampers are used to shut off or control airflow in ductwork where tightness, thermal insulation and reliability are important. In the closed position damper leakage class is 4 in accordance with the EN1751. In the open position the blades are turned in the direction of flow and do not causes significant pressure losses. The UTT dampers are manufactured for both rectangular (width B 100-2400mm and height H 100-2400mm, 1mm division) and circular ducts (Ø100-1250mm). Special non-standard dimensions and flange drilling are available on request. Standard frame material thickness is 1mm.

TECHNICAL SPECIFICATION & DIMENSIONS

- material casing: galvanized steel (stainless steel AISI 316 also available)
- material blades: galvanized steel (stainless steel AISI 316 also available)
- material blade gaskets: silicon (heat-proof model: LTE rubber)
- material duct gasket: rubber compound (circular connection)
- material slide bearings: alloy of polyamide and molybdenum sulphide (self-lubricated heat-proof model stainless steel AISI 316 also available)
- material drive shaft: galvanized steel

Circular connection

Dimension [mm]		Weight [kg]		Dimension [mm]		Weight [kg]	
D1/D2 ØD	BxH	UTT D1	UTT D2	ØD	BxH	UTT D1	UTT D2
100	150x150	-	-	400	400x400	9	11
125	150x150	-	-	500	500x500	12	15
160	200x200	4	4	630	600x600	17	21
200	200x200	4	5	800	800x800	24	30
250	250x250	5	6	1000	1000x1000	33	43
315	300x300	7	9	1250	1250x1250	52	67

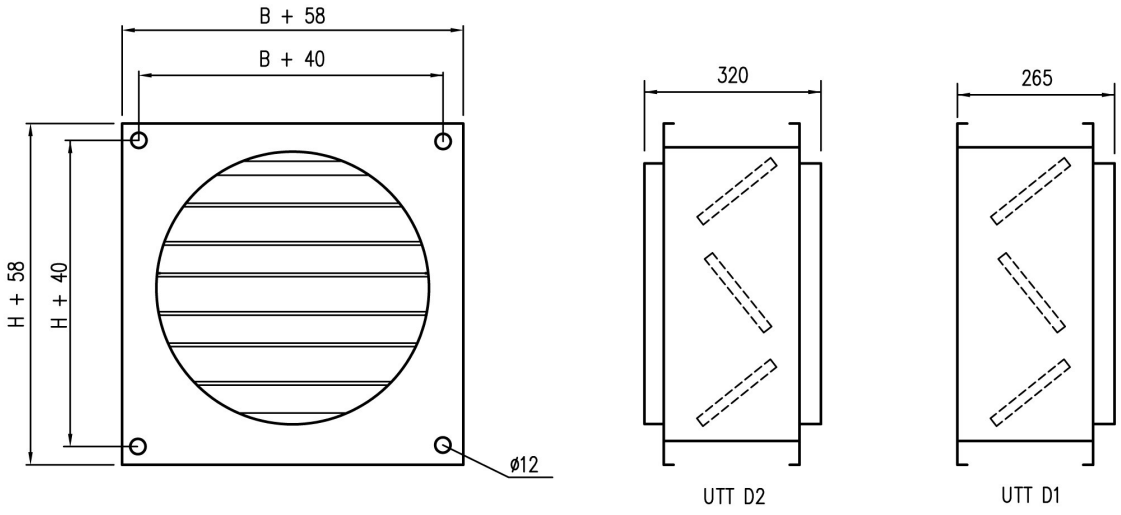

Weights [kg] of standard UTT dampers without actuator

H [mm]	B [mm]											
	100	200	300	400	500	600	700	800	900	1000	1100	1200
200	3	3	4	5	6	7	7	8	9	9	10	16
300	4	5	6	7	7	8	9	10	11	11	12	19
400	5	6	6	7	8	9	10	11	12	13	13	20
500	5	6	7	8	9	10	11	12	13	14	15	22
600	6	7	8	9	11	12	13	14	15	16	17	24
700	7	8	9	10	11	13	14	15	16	18	19	26
800	8	9	10	12	13	14	16	17	18	20	21	28
900	8	10	11	12	14	15	17	18	20	21	23	30
1000	9	11	12	14	15	17	18	20	22	23	25	32
1100	10	11	13	15	16	18	20	21	23	25	26	34
1200	11	12	14	16	18	19	21	23	25	27	28	36
1300	11	13	15	17	19	21	22	24	26	28	30	38
1400	12	14	16	18	20	22	24	26	28	30	32	40
1500	13	15	17	19	21	23	25	27	30	32	34	42
1600	14	16	18	20	22	25	27	29	31	34	36	44
1700	14	16	19	21	23	26	28	30	33	35	38	46
1800	15	17	20	22	25	27	30	32	35	37	40	48
1900	16	18	21	23	26	28	31	34	36	39	41	50
2000	16	19	22	25	27	30	33	35	38	41	43	52
2100	17	20	3	25	28	31	34	37	39	42	45	54
2200	18	21	24	27	30	33	36	38	41	44	47	56
2300	19	22	25	28	31	34	37	40	43	46	49	58
2400	20	23	26	29	32	35	38	42	45	49	51	60

H [mm]	B [mm]											
	1300	1400	1500	1600	1700	1800	1900	2000	2100	2200	2300	2400
200	17	17	18	21	21	22	23	25	26	27	27	28
300	20	20	21	24	25	26	26	29	30	31	31	32
400	21	22	23	26	27	27	28	31	32	33	33	35
500	23	24	25	28	29	30	31	34	35	36	36	38
600	25	26	27	31	32	33	34	37	38	39	39	41
700	27	28	29	33	34	35	36	40	41	42	42	44
800	29	31	32	35	37	38	39	43	44	45	45	48
900	31	33	34	38	39	40	42	45	47	48	48	51
1000	34	35	37	40	42	43	45	49	50	52	52	55
1100	35	37	39	42	44	46	47	51	53	54	54	58
1200	38	40	41	45	47	49	51	54	56	58	58	62
1300	40	41	43	47	49	51	53	57	59	61	61	65
1400	42	44	46	50	52	54	56	60	62	64	64	68
1500	44	46	48	52	54	56	59	63	65	67	67	71
1600	46	48	51	55	57	59	62	66	68	70	70	75
1700	48	50	53	57	59	62	64	69	71	73	73	78
1800	50	53	55	60	62	65	67	72	74	77	77	82
1900	52	55	57	62	65	67	70	74	77	79	79	85
2000	55	57	60	65	67	70	73	78	80	83	83	88
2100	56	59	62	67	70	72	75	80	83	86	86	91
2200	59	62	65	70	73	76	78	83	86	89	89	95
2300	61	64	67	72	75	78	81	86	89	92	92	98
2400	63	66	69	75	78	81	84	89	92	95	95	102

Rectangular connection

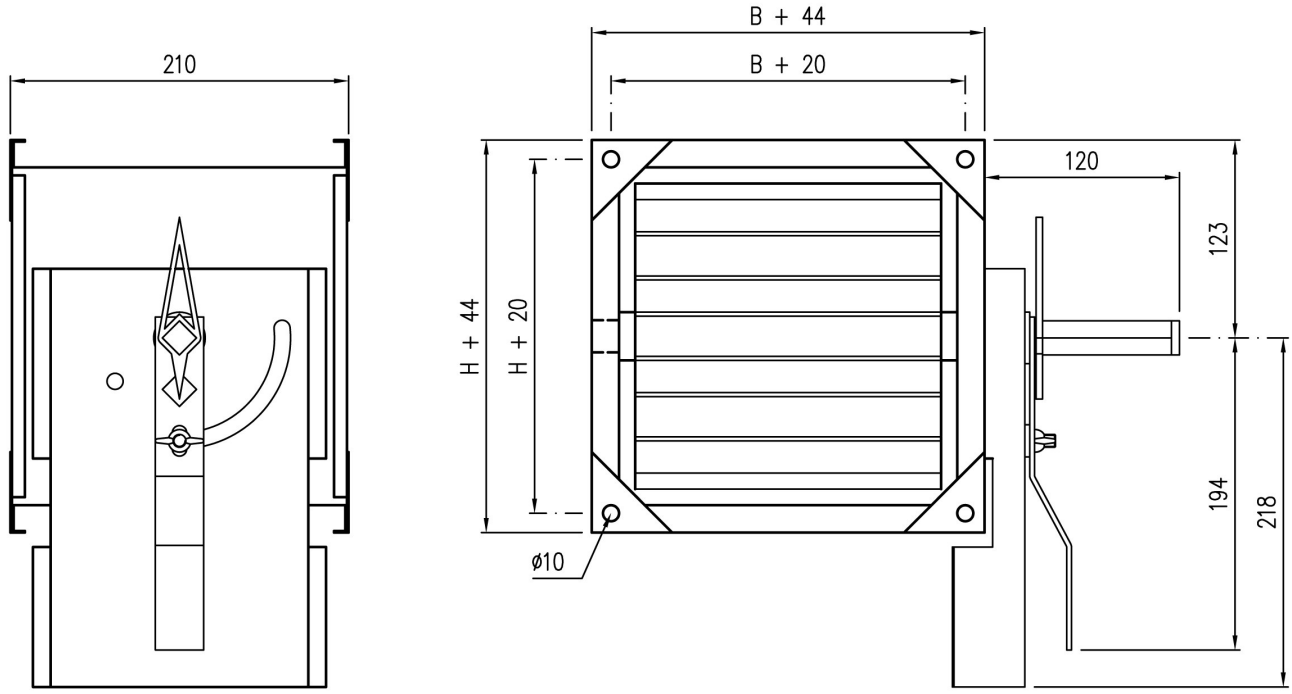

Flange connection

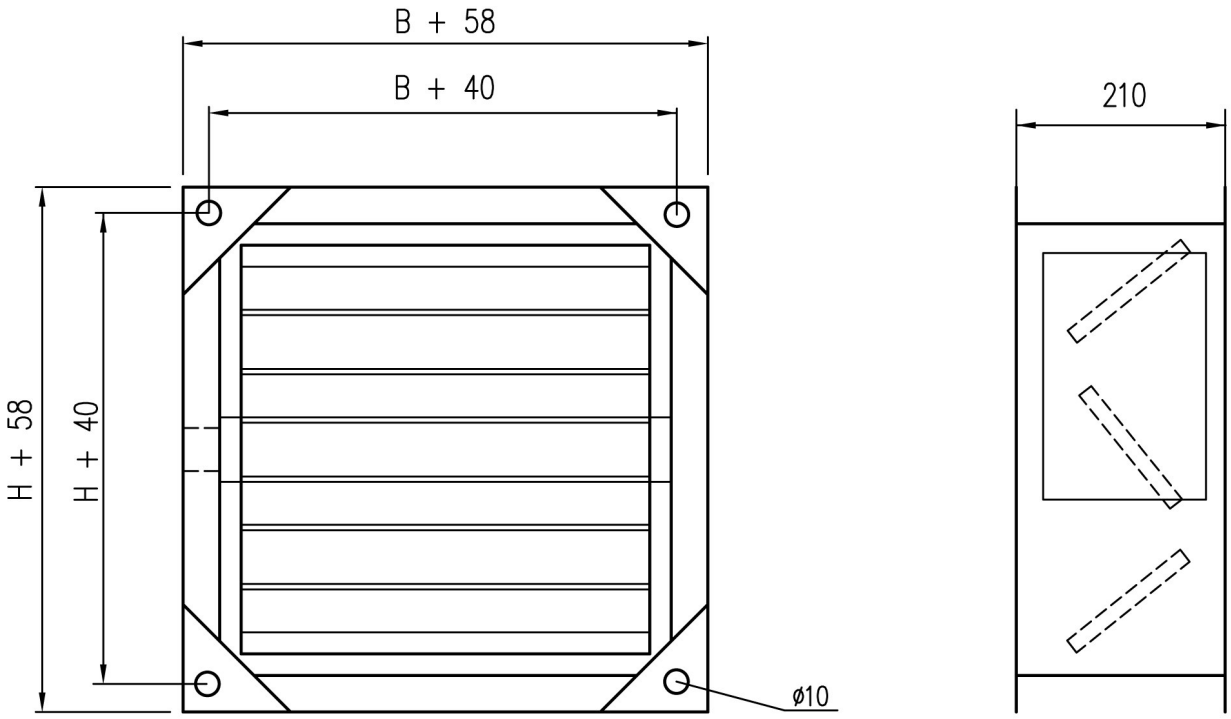

DESCRIPTION

Marine ventilation adjusting dampers LDA are destined for installation in ventilation systems of seagoing ships and offshore objects. Dampers may be used as functional flaps enabling adjustment of direction of air blown to engine rooms and similar spaces or full closing of opening. LDA consist of mild steel frame and rotary blades manually controlled by lever. A locking nut enables the fixing of blades within the range from 0° to 90°. Optionally damper may be equipped with wire mesh 13x13mm (must be specified at the order). Surface treatment: hot-dip galvanized. Preservation with set of marine paints is available on request.

MARKING

Example: LDA type damper of dimensions B=800mm and H=1550mm: LDA-800x1550

DIMENSIONS

Dimensions [mm]	
B	H
250-1500	250-2050
(each 50mm)	(each 100mm)

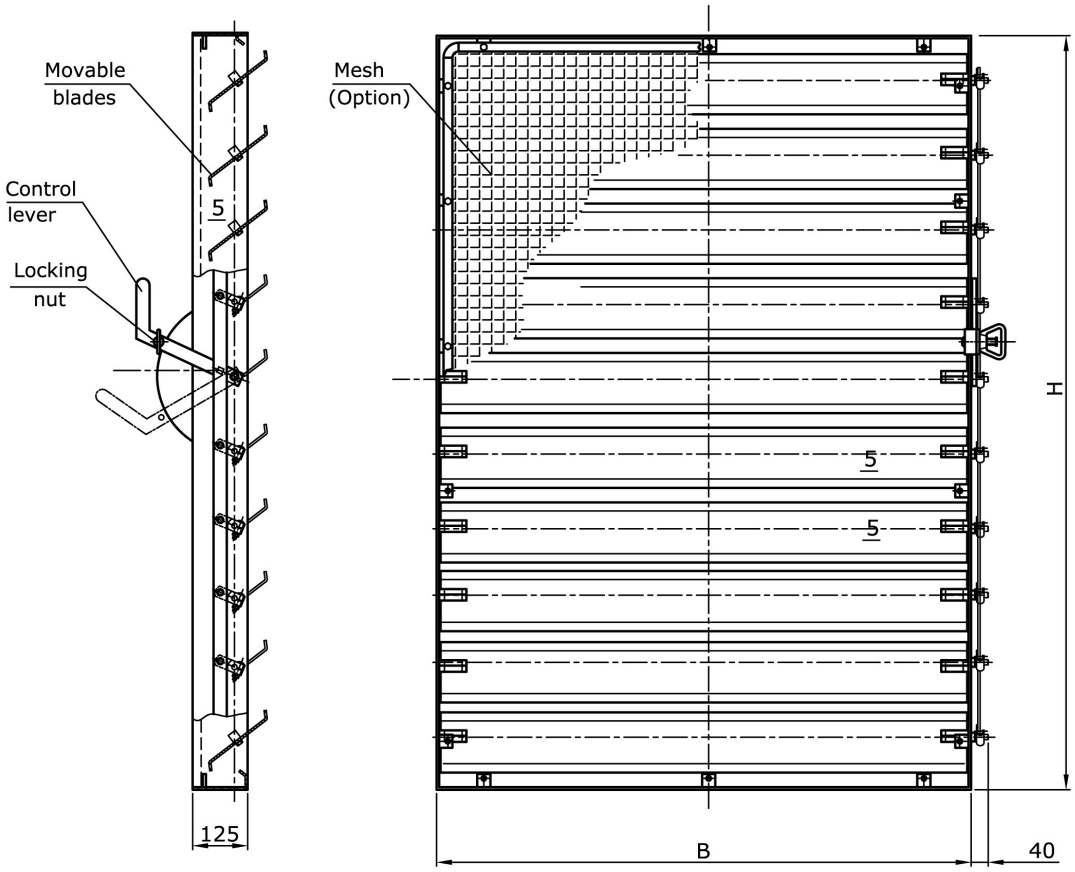

DESCRIPTION

The FDB2 fire dampers are type-approved class A0 (A60) fire and gas dampers for use in offshore, marine and navy ventilation systems. The unit can be installed in rectangular or circular ducts. All fire dampers have a fusible link and they prevent the spread of fire and gases within the ventilation ductwork. When the blades are in the open position, the device does not cause significant pressure loss, noise or flow disturbance. Fire dampers are set from outside and can be installed in any position. An open-closed indicator is visible on the outside of the damper. Fire dampers with non-standard dimensions can be supplied on request.
Blades contain silicone (effective up to 300°C) for low leakage in normal conditions and thermal expansion graphite seals (effective from 150°C) to increase tightness even up to 50% in a case of fire. Nominal fuse release temperature is 50°C, 74°C or 100°C. The unit has low weight due to double skin blade structure. Maximum duct pressure for damper construction is 5000Pa and maximum air velocity is 15m/s. FBD2 fire dampers meet international standards for both rectangular (width B 100-1200mm and height H 100-1600mm, 1mm division) and circular ducts (Ø100-1250mm). Standard flange width is 27mm. Flanges and drilling are also available according to ISO 15138 standards. Modular construction sizes up to 2400x3200mm are available. Standard frame material thickness is 3mm. Frame thickness 3-5mm according to SOLAS are available on request.

TECHNICAL SPECIFICATION & DIMENSIONS

- material frame: carbon steel (painted or galvanized)
- material frame: stainless steel
- material blade: galvanized or stainless steel
- material maintenance-free bearings: stainless steel (bronze bearings optional)
- material shafts: stainless steel

Dimensions	S [mm]	L [mm] rectangular connection	K [mm] circular connection
If B or H ≥ 100, but ≤ 449	3	210	361
If B or H ≥ 450, but ≤ 649	4	212	365
If B or H ≥ 650	5	215	370

Weights [kg] of standard FBD2 dampers without an actuator

H [mm]	B [mm]											
	100	200	300	400	500	600	700	800	900	1000	1100	1200
100	5 (5)	7 (7)	9 (9)	10 (10)	12 (13)	14 (15)	15 (22)	17 (25)	19 (27)	20 (30)	22 (32)	24 (35)
200	7 (7)	9 (9)	11 (11)	12 (12)	14 (16)	16 (18)	18 (26)	20 (28)	22 (31)	23 (34)	25 (36)	27 (39)
300	9 (9)	11 (11)	13 (13)	15 (15)	17 (19)	19 (21)	21 (30)	23 (32)	25 (35)	27 (38)	29 (41)	31 (43)
400	11 (11)	13 (13)	15 (15)	17 (17)	20 (22)	22 (24)	24 (33)	26 (36)	28 (39)	30 (42)	32 (45)	34 (48)
500	13 (16)	16 (19)	18 (22)	21 (25)	23 (27)	25 (30)	28 (38)	30 (41)	32 (44)	35 (47)	37 (50)	39 (54)
600	15 (18)	18 (21)	20 (24)	23 (27)	25 (30)	28 (33)	30 (41)	33 (45)	35 (48)	38 (51)	40 (55)	43 (58)
700	18 (25)	21 (28)	23 (32)	26 (35)	29 (39)	32 (42)	34 (46)	37 (50)	40 (53)	42 (57)	45 (60)	48 (64)
800	20 (27)	23 (31)	25 (35)	28 (38)	31 (42)	34 (46)	37 (50)	40 (53)	43 (57)	46 (61)	49 (64)	51 (68)
900	22 (31)	25 (35)	28 (39)	32 (42)	35 (46)	38 (50)	41 (54)	44 (58)	47 (62)	50 (66)	53 (70)	56 (74)
1000	24 (33)	27 (37)	31 (41)	34 (45)	37 (50)	40 (54)	44 (58)	47 (62)	50 (66)	53 (70)	57 (74)	60 (78)
1100	26 (36)	30 (41)	33 (45)	37 (49)	40 (54)	44 (58)	47 (62)	51 (67)	54 (71)	58 (75)	61 (79)	65 (84)
1200	28 (39)	32 (44)	36 (48)	39 (52)	43 (57)	46 (61)	50 (66)	54 (70)	57 (75)	61 (79)	65 (84)	68 (88)
1300	31 (42)	35 (47)	38 (52)	42 (56)	46 (61)	50 (66)	54 (70)	58 (75)	62 (80)	65 (84)	69 (89)	73 (94)
1400	32 (45)	37 (50)	41 (55)	45 (59)	49 (64)	53 (69)	57 (74)	61 (79)	65 (84)	69 (88)	73 (93)	77 (98)
1500	35 (48)	39 (53)	43 (58)	48 (63)	52 (68)	56 (73)	60 (78)	65 (83)	69 (89)	73 (94)	77 (99)	82(104)
1600	36 (51)	41 (56)	45 (61)	50 (66)	54 (72)	59 (77)	63 (82)	67 (87)	72 (92)	76 (98)	81(103)	85(108)

(Frame thickness according to SOLAS)

Rectangular, S – according to SOLAS

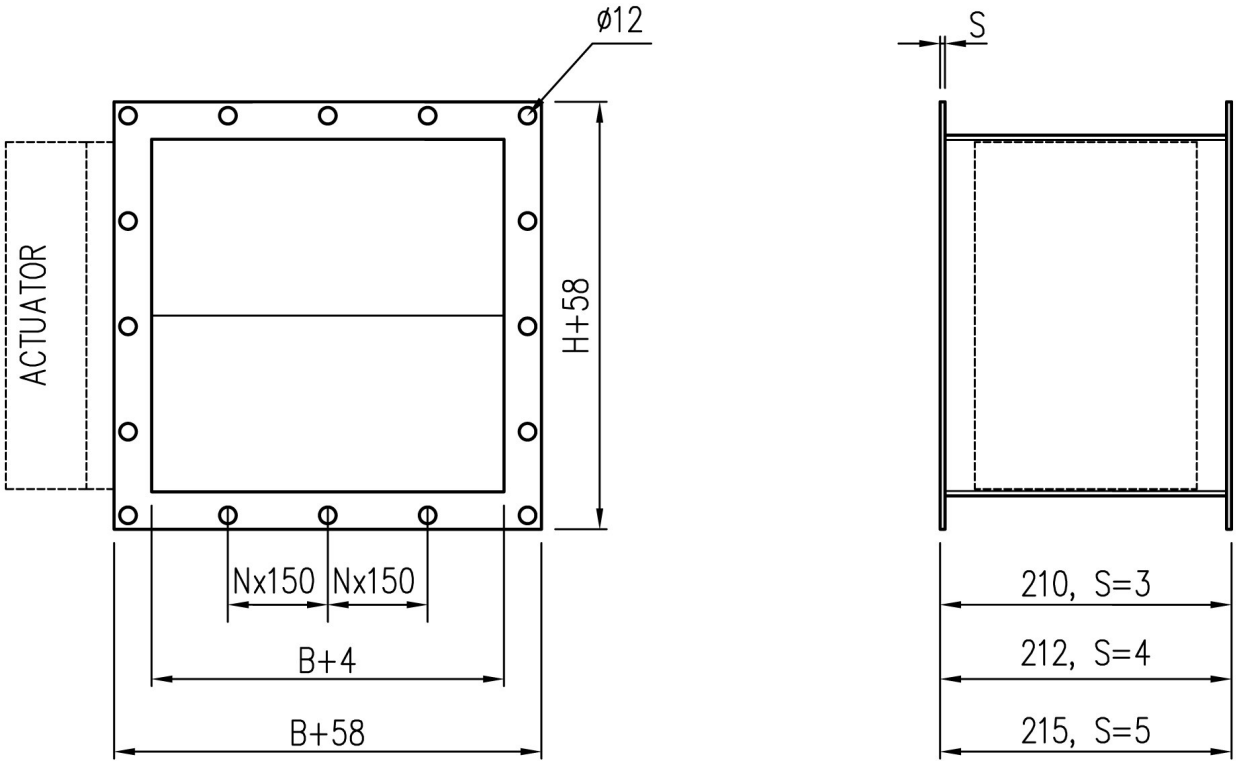

ØD [mm]	Weight [kg]	ØD [mm]	Weight [kg]
100	8 (8)	400	27 (27)
125	8 (8)	500	35 (43)
160	12 (12)	630	46 (62)
200	13 (13)	800	62 (89)
250	19 (19)	1000	83 (118)
315	20 (20)	1250	113 (162)

(Frame thickness according to SOLAS)

Circular with connection flanges, S – according to SOLAS

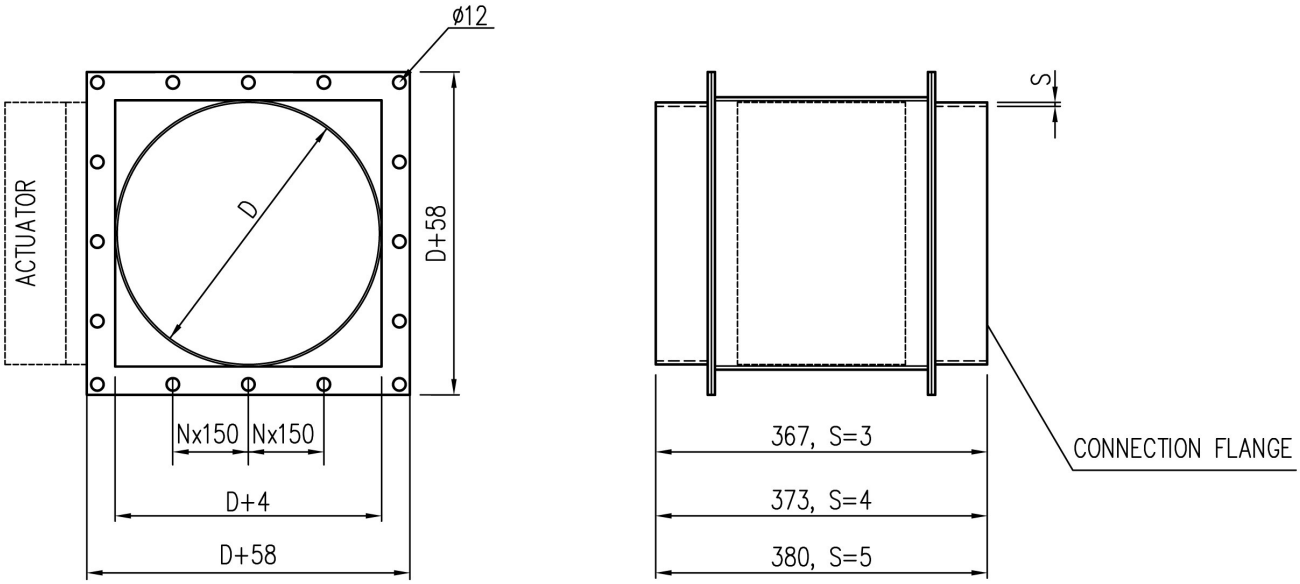

DESCRIPTION

The FDD fire dampers are type-approved class A0 (A60) for use in marine and offshore ventilation systems. The FDD can be installed in circular ducts. All fire dampers have a fusible link and they prevent the spread of fire and gasses within the ventilation ductwork. When the blade is in the open position, the device does not cause significant pressure loss, noise or flow disturbance. Fire dampers are set from outside and can be installed in any position. An open-closed indicator is visible on the outside of the damper. The FDD dampers are type-approved by most recognized classification societies. Blade contains glass fibre seals (effective up to 300°C) and thermal expansion graphite seals (effective from 150°C). Nominal release temperatures of fuses are 50°C, 74°C and 100°C. Automatic, electrical, pneumatic or spring operation system is available. Maximum duct pressure for damper construction is 5000Pa and maximum air velocity is 15m/s.
The FDD fire dampers meet international standards for circular ducts (Ø100-315mm). Sizes Ø100 and Ø125 are not available of stainless steel. Standard flange width is 27mm. Frame material thickness is minimum 3mm.

The FDD unit is available with following actuators:

- FDD-EL: electrical spring return motor, standard actuators being 24V or 230V or 120V. The motor contains built-in open-closed limit switches. Separate junction box included in the EL-model. A wide-range of ex-proof actuators are available, including a one second closing time function as an option;
- FDD-PNL: pneumatic linear actuator, material AISI 316;
- FDD-PNR: pneumatic rotating actuator;
- FDD-SP: manual spring-actuated damper with fusible link.

TECHNICAL SPECIFICATION & DIMENSIONS

- material frame: carbon steel (painted or galvanized) or stainless steel
- material blades: galvanized steel or stainless steel
- material maintenance-free bearings: stainless steel (bronze bearings optional)
- shafts: stainless steel

FDD dimensions [mm] without flanges (standard)

		FDD-EL	FDD-PNL	FDD-PNR	FDD-SP
D	L	R	R	R	R
100	200	317	317	-	-
125	200	317	317	-	-
160	200	317	317	-	-
200	320	362	362	-	-
250	320	362	362	-	-
315	320	362	362	-	-

FDD dimensions [mm] with flanges (option)

						FDD-EL			FDD-PNL			FDD-PNR			FDD-SP		
D	S	K	T	N	L	H	A	R	H	A	R	H	A	R	H	A	R
100	200	120	7	4	206	295	300	320	295	500	520	340	300	-	295	200	-
125	225	150	7	4	206	310	315	320	310	515	520	355	315	-	310	225	-
160	260	185	7	4	206	350	330	320	350	530	520	395	330	-	350	260	-
200	300	225	7	4	326	390	350	365	390	550	565	435	350	-	390	300	-
250	350	280	10	4	326	440	375	365	440	575	565	485	375	-	440	350	-
315	415	355	10	8	326	505	410	365	505	610	565	550	410	-	505	415	-

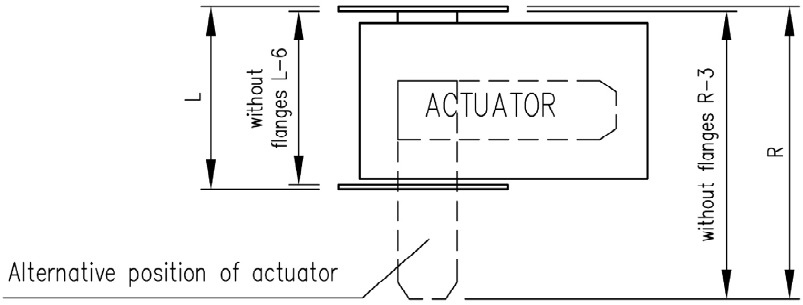

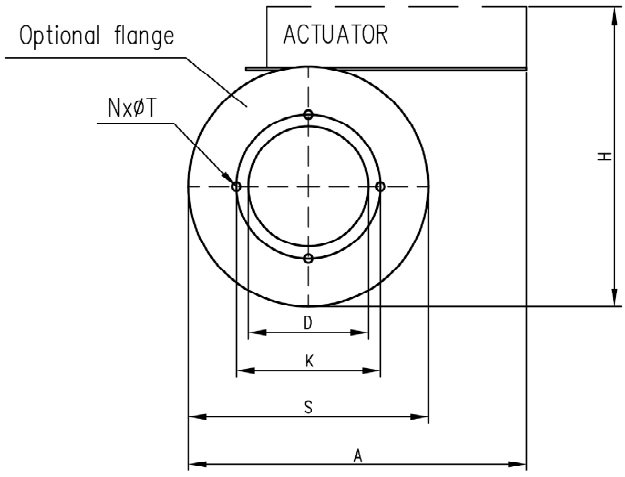

DESCRIPTION

The fail-safe marine automatic fire dampers FDA type are designed for installation in ventilation and air conditioning ducts at A0-A60 fire class divisions (decks and bulkheads). They prevent the spread of fire and smoke within the ventilation ductwork. FDA fire dampers consist of flanged steel casing with opposed blades filled with fire-resistant mineral wool sealed with thermal expanding gasket. Fail-safe is made by thermal release device which operates if temperature inside the duct increases above 72°C (optionally 90°C, e.g. for galley applications). Then, or if power supply is interrupted, spring-return actuator closes the blades. The damper is open automatically when the thermal element has been replaced or operating voltage is reconnected. The blades actual position is clearly marked on its casing. Both electrically and pneumatically operated fire dampers are fitted for device for manual closing in case of actuator failure.
FDA fire dampers can be supplied with or without remote control/indicating device. For dampers with electric actuator it comprises one or two controllers for closing/opening and red/green lamps for indication of damper actual position. Controllers have to be installed on one or both sides of protected partition according to the Regulations. Dampers with pneumatic actuator, in addition to above, can be fitted with delivered loose electro-pneumatic valve for actuator control.
FDA fire dampers have been fire tested in accordance with approval procedure of IMO Resolution A.754(18) 1994. Dampers FDA can be installed on A0, A15, A30 and A60 fire class decks and bulkheads where required by SOLAS 2002 provided that:

- dampers are fitted to deck or bulkhead by means of penetration as required by Rules;
- penetration and damper's casing are fire insulated as required by Rules.

FDA automatic fire dampers are manufactured with electric or pneumatic actuators, both of single-action return spring. Electric actuator voltage is 24V or 230V, frequency – 50/60Hz, enclosure IP54. Power consumption is 8W at spring tightening and 3W if blades are kept in open position. Damper release time is 20 seconds, reset time – 150 seconds. Pneumatic actuator for 5-8 bars gas working pressure, release/reset time less than 5 seconds. Electric supply for electro-pneumatic control valve and limit switches – 24V or 230V, 50/60Hz. Both electrically and pneumatically driven fire dampers are produced in standard and explosion-proof executions, with non-sparking movable co-operating elements and EExdIICT6 class electrical equipment.

TECHNICAL SPECIFICATION & DIMENSIONS

Dimensions [mm]						
BxH	For B or H	S	L	C	D	Execution
100x100 to 1000x1000	100 - 315	3	220	200	100	Standard
	400, 500	4	300	230	210	Dampers with EExd electric actuator
	630 - 1000	5				

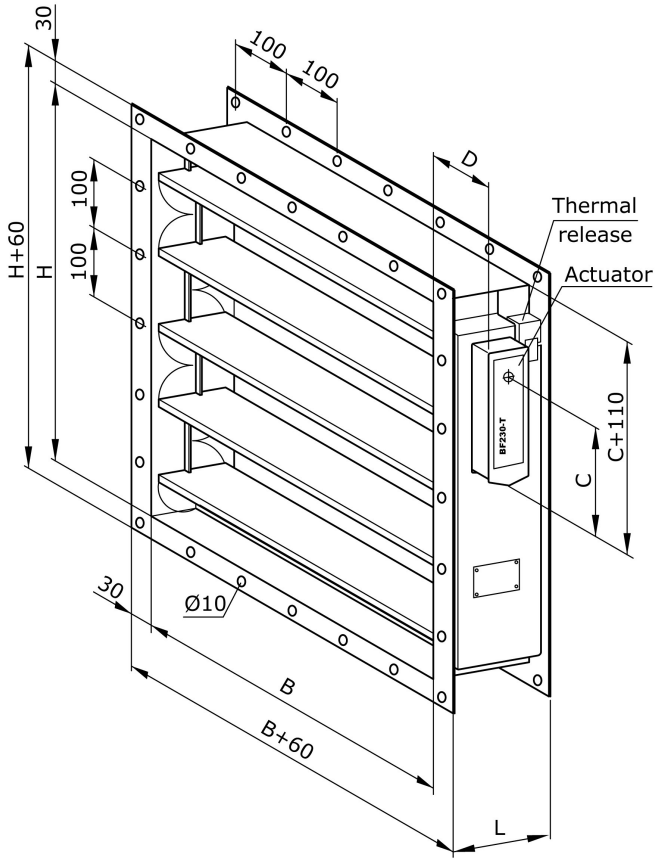

MARKING

Example of FDA fire damper marking:
FDA-500x300-EL230-ST-CS-72-2C

500x300 - damper width/height
EL24 - electric actuator, voltage 24V
EL230 - electric actuator, voltage 230V
PN230 - pneumatic actuator, voltage 230V
PN24 - pneumatic actuator, voltage 24V
ST - standard execution
EX - explosion-proof execution

CS - damper material - carbon steel
SS - damper material - stainless steel
72 - release temperature, 72°C
2C - damper with two controllers
1C - damper with one controller
NC - damper without controllers

DESCRIPTION

The FEX fire dampers are type-approved class H0 (H120) fire dampers for use in offshore, nuclear and navy ventilation systems. These units are used to protect the integrity of bulkheads where they are penetrated by ventilation ducts. The FEX dampers can be installed in rectangular or circular ducts. Dampers have a fusible link and they prevent the spread of fire and gases (low-leakage model) within the ventilation ductwork. When the blades are in an open position, the device does not cause significant pressure loss, noise or flow disturbance. The FEX dampers are set from outside and are suitable to be installed in bulkheads. An open-closed label is visible on the outside of the damper. This type of damper has ATEX approved. Fixed frame and blades are made of stainless steel AISI 316L. Blades contain thermal expansion seals. Nominal release temperatures of fuses are 50°C, 74°C and 100°C degrees (other temperatures available). Maximum duct pressure for damper construction is 5000Pa and maximum air velocity is 15m/s. The FEX fire dampers are manufactured for both rectangular and circular ducts.

TECHNICAL SPECIFICATION & DIMENSIONS

- material frame: stainless steel (plain or painted)
- material blades: stainless steal
- material maintenance-free bearings: stainless steel (bronze bearings optional)
- material shafts: stainless steel

Sizes for rectangular ducts (BxH) are available from 100x100mm to 1200x1200mm in 1 mm increments of duct. Sizes for circular ducts (BxH) are available from diameter 100mm to 1250mm. Sizes of flange is 40mm as standard. Standard frame material thickness is 3mm. Blades are made of two sheets each of them being 1mm thick.

Weights [kg] of standard FEX dampers without an actuator

H [mm]	B [mm]											
	100	200	300	400	500	600	700	800	900	1000	1100	1200
100	6	8	10	12	14	17	19	21	23	25	27	29
200	8	11	13	15	17	19	22	24	26	28	30	32
300	11	14	16	18	20	23	25	27	30	32	34	37
400	13	16	18	21	23	26	28	31	33	35	38	40
500	16	19	22	24	27	30	32	35	38	40	43	46
600	18	21	24	27	30	33	35	38	41	44	47	50
700	21	24	27	30	33	37	40	43	46	49	52	55
800	23	27	30	33	36	39	43	46	49	52	56	59
900	26	30	33	37	40	43	47	50	54	57	61	64
1000	28	32	36	39	43	46	50	54	57	61	64	68
1100	31	35	39	43	46	50	54	58	62	66	69	73
1200	33	37	41	45	49	53	57	61	65	69	73	77

Rectangular connection

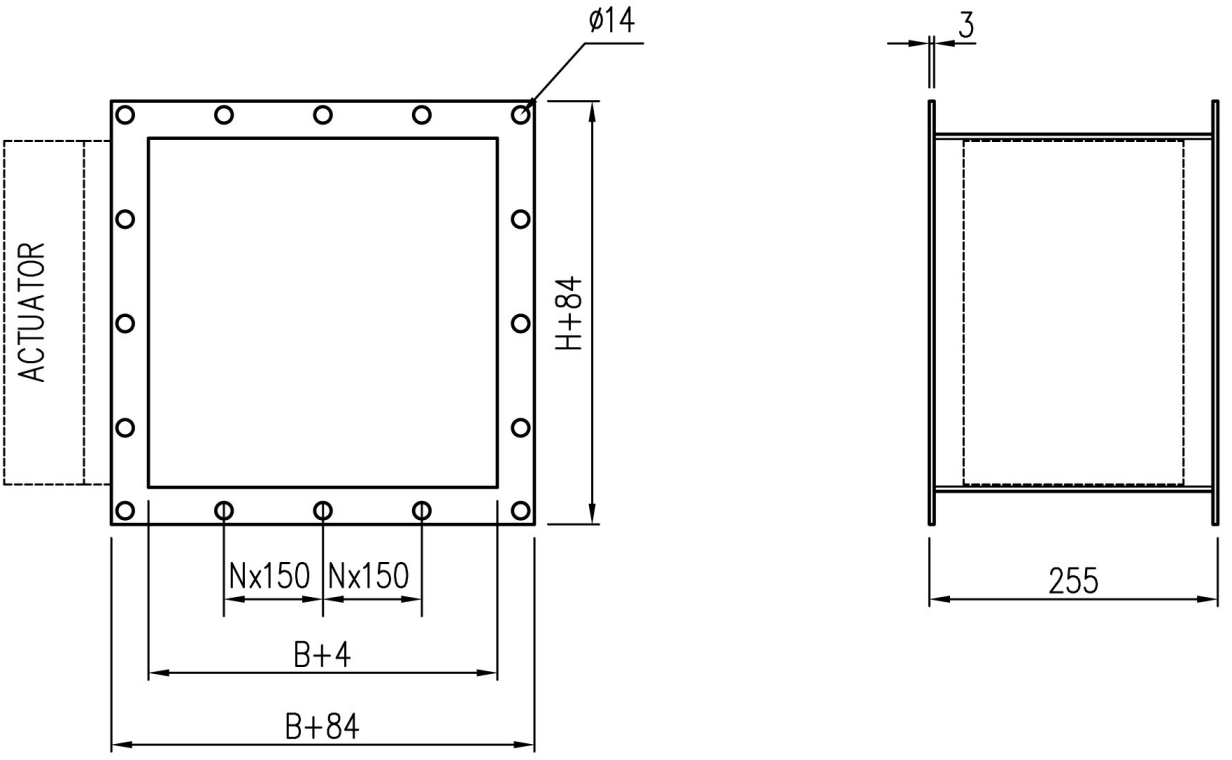

ØD [mm]	Weight [kg]	ØD [mm]	Weight [kg]
100	8	400	28
125	9	500	37
160	14	630	48
200	14	800	64
250	20	1000	86
315	21	1250	117

Circular with connection flanges

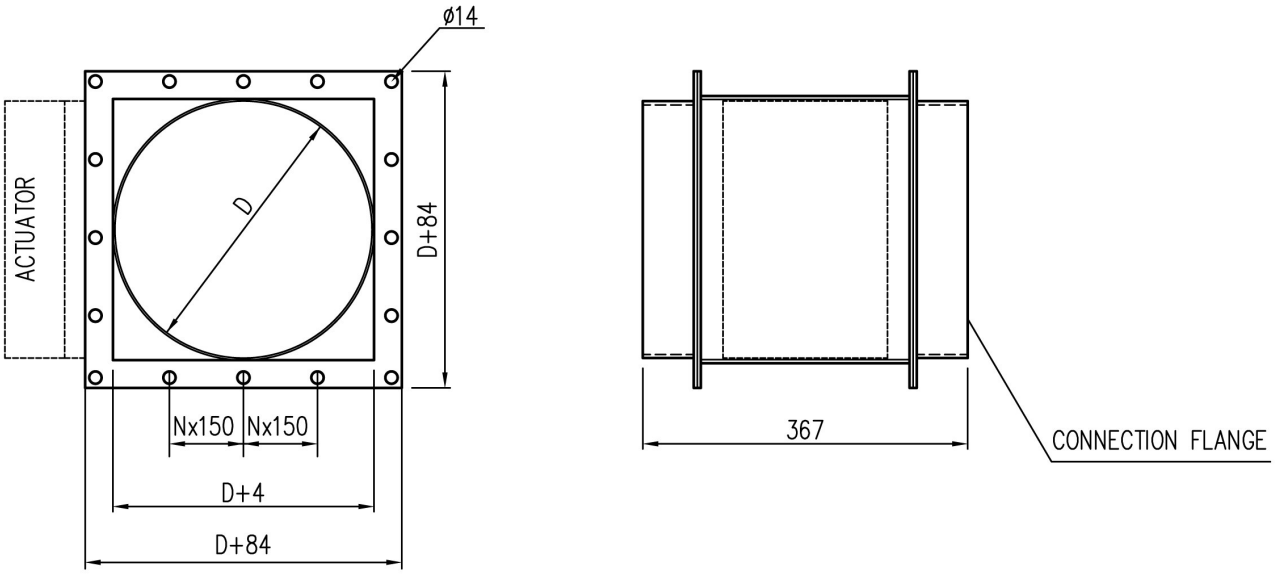

DESCRIPTION

The UTG dampers are used to shut-off and balance air flow rates in high pressure ductwork. Dampers meet international standards for rectangular and round ducts. In the open position, the blades face the direction of flow and do not cause a significant pressure loss. The UTG is used as a shut-off, gas and balancing damper in applications where tightness and reliability are important. Closed damper fulfills the leakage and exhaust requirement of NORSOK. Electrical, pneumatically or manual operation system is available. The UTG dampers can be supplied with connection pieces for round duct. Maximum duct pressure for damper construction is 5000Pa and maximum air velocity is 15m/s.
The UTG dampers meet international standards for both rectangular (width B 100-1200mm and height H 100-1600mm, 1mm division) and circular ducts (Ø100-1250mm). Non-standard dimensions are available on request. Standard flange width is 27mm. Flanges and drilling are also available according to ISO 15138 standards. Modular construction sizes are available up to 2400x3200mm. Frame thickness is 3mm.

TECHNICAL SPECIFICATION & DIMENSIONS

- material frame: carbon steel (painted or galvanized) or stainless steel
- material blades: galvanized or stainless steel
- material maintenance-free bearings: stainless steel (bronze bearings available as option)
- material shafts: stainless steel

Weights [kg] of standard UTG dampers without an actuator

H [mm]	B [mm]											
	100	200	300	400	500	600	700	800	900	1000	1100	1200
100	4	6	7	9	10	12	13	15	16	17	19	20
200	6	8	9	11	13	14	16	17	19	21	22	24
300	8	10	12	14	15	17	19	21	22	24	26	28
400	10	12	14	16	18	20	22	23	25	27	29	31
500	13	15	17	19	21	23	25	28	30	32	34	36
600	15	17	19	21	24	26	28	30	33	35	37	39
700	17	20	22	25	27	29	32	34	37	39	42	44
800	19	22	24	27	29	32	35	37	40	43	45	48
900	21	24	27	30	33	36	38	41	44	47	50	53
1000	23	26	29	32	35	38	41	44	47	50	53	56
1100	26	29	32	35	38	42	45	48	51	55	58	61
1200	27	31	34	37	41	44	48	51	54	58	61	64
1300	30	33	37	41	44	48	51	55	58	62	66	69
1400	32	35	39	43	47	50	54	58	61	65	69	73
1500	34	38	42	46	50	54	58	62	66	70	74	77
1600	36	40	44	48	52	56	60	65	69	73	77	81

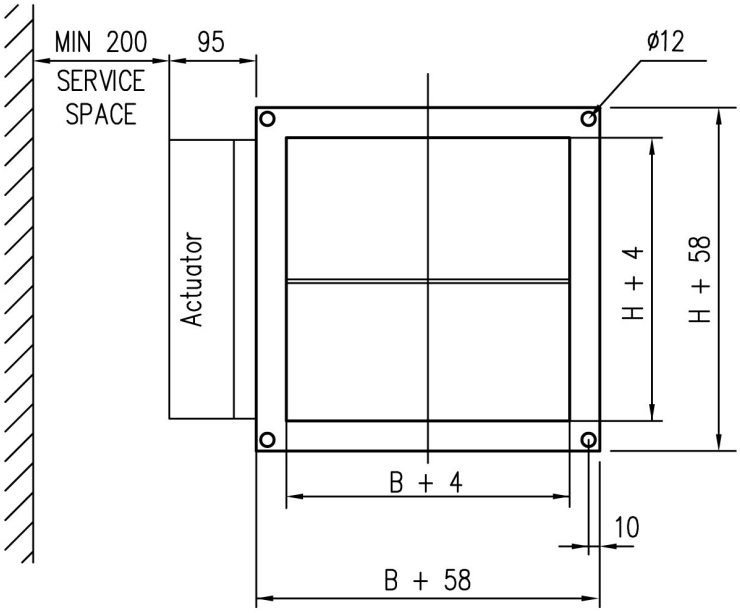

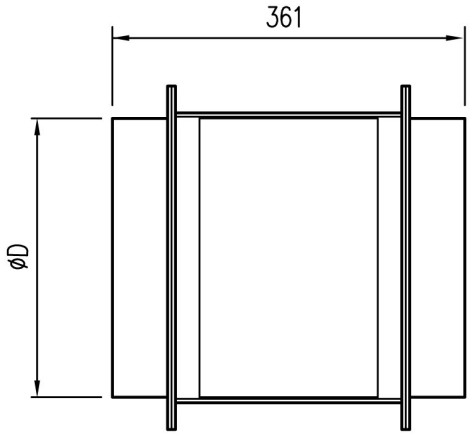

Circular connection

ØD [mm]	Weight [kg]	ØD [mm]	Weight [kg]
100	7	400	26
125	8	500	34
160	11	630	44
200	12	800	59
250	17	1000	80
315	19	1250	110

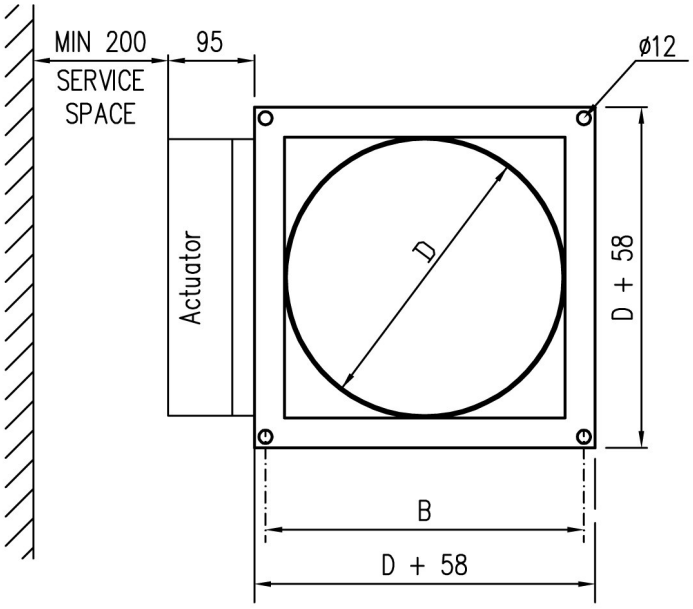

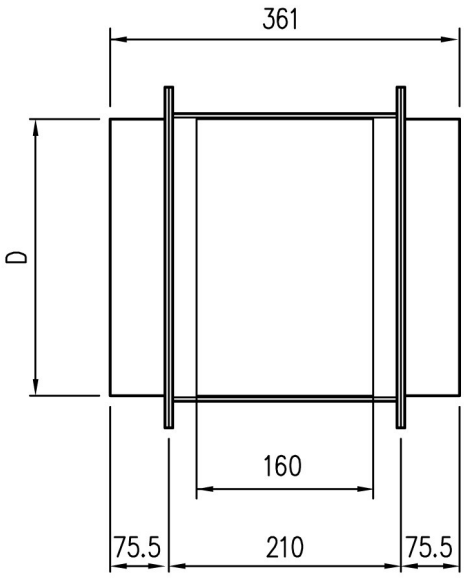

DESCRIPTION

The CFD circular cut-off dampers are destined for installation in ventilation systems of seagoing ships and offshore objects. They may be used as fire closure of main ventilation inlets and outlets as per SOLAS regulations. Steel components of dampers are painted with set of marine paints. Hot-dip galvanized on request.

MARKING

Example: CFD type damper of nominal diameter DN=500mm: CFD-500

TECHNICAL SPECIFICATION & DIMENSIONS

CFD dampers consist of steel flanged casing and rotary steel flap of thickness corresponding requirements of regulations. Shaft bearings provided with greasing nipples, maintenance-free bearings on request. Lever for manual control is with locking pin with chain. Damper may be supplied loose, without casing (must be specified in order).

Dimensions [mm]								Weight [kg]
DN	A	B	NxØD	C	D	H	S	
160	220	250	16xØ12	10	8.8	160	4	8.4
200	260	290	16xØ12	10	8.8	200	4	13
250	310	340	16xØ12	10	8.8	250	5	20.4
315	370	405	24xØ12	10	9	315	5	32.4
400	460	490	24xØ12	10	10	400	5	52.2
500	560	590	32xØ12	12	10	500	6	81.6
560	640	690	32xØ14	12	10	560	6	91.4
630	695	730	32xØ14	12	10	630	7	129
710	775	810	48xØ14	12	10	710	7	164
800	865	900	48xØ14	12	10	800	7	209
900	965	1000	64xØ14	12	10	900	8	260
1000	1065	1100	64xØ14	12	10	1000	8	326
1120	1205	1100	64xØ14	12	10	1120	8	409
1250	1335	1380	64xØ14	12	10	1250	8	510
1400	1485	1530	64xØ14	12	10	1400	8	643
1600	1685	1730	64xØ14	12	10	1600	8	773

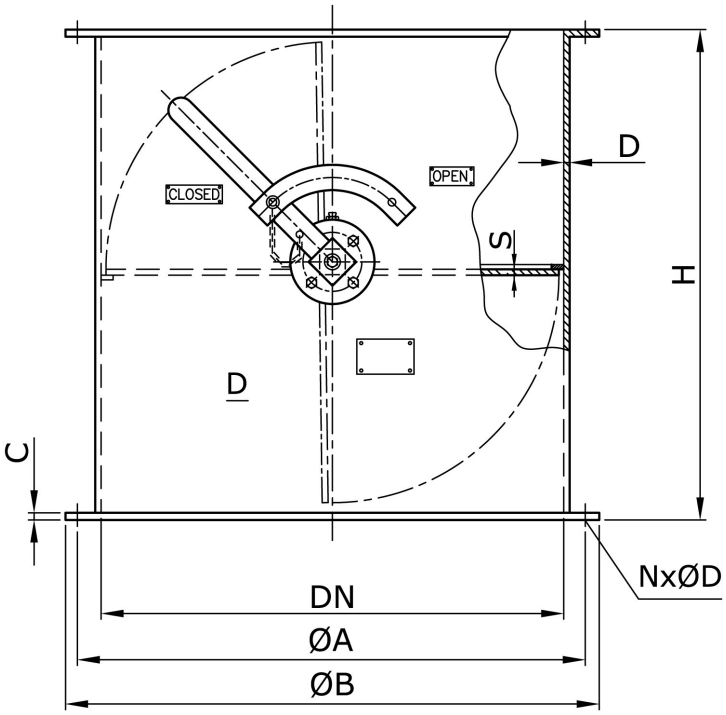
CLOSED
OPEN
D
S
H
D
C
NxØD
DN
ØA
ØB

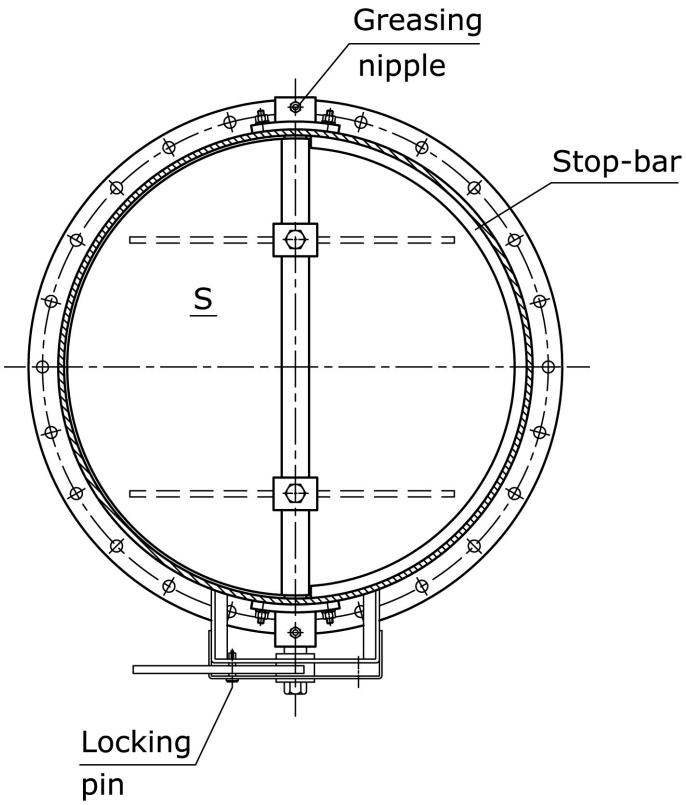
Greasing
nipple
Stop-bar
S
Locking
pin

DESCRIPTION

The RFD rectangular cut-off dampers are destined for installation in ventilation systems of seagoing ships and offshore objects. They may be used as fire closure of main ventilation inlets and outlets according to SOLAS regulations. RFD dampers consist of rotary steel flap of thickness corresponding to requirements of regulations and associated shaft with bearings and control lever. Shaft bearings provided with greasing nipples, maintenance-free bearings on request. Lever is for manual control with locking pin with chain. Damper may be supplied with flanged casing. Dimensions must be than defined by the Customer. Steel components of dampers are painted with set of marine paints. Hot-dip galvanized available on request.

MARKING

Example: RFD type damper of dimensions (duct) AxB=315x500mm: RFD-315x500

TECHNICAL SPECIFICATION & DIMENSIONS

Dimensions [mm] and weights [kg]												
A / B	100	160	200	250	315	400	500	630	710	800	900	1000
100	2.7	-	-									
160	2.9	3.2	-									
200	3.2	3.7	3.9									
250	3.4	4.5	4.7	5.7	-	-						
315	3.7	5.3	5.0	6.6	7.4	-						
400	-	6.2	6.9	7.4	8.2	9.3						
500			7.8	8.6	9.5	10.9	15.4	-	-			
630			-	13.6	15.7	17.1	19.3	22.2	-			
710			-	-	17.2	18.3	22.7	26.4	30.7			
800					19.8	22.8	26.3	30.7	33.6	41.3	-	
1000					-	26.1	34.6	40.6	44.1	48.1	61.2	
1250					-	-	41.7	51.3	55.7	60.8	66.5	
1400								63.7	62.8	75.2	72.1	89.8
1600								-	77.4	85.1	92.3	99.6
2000								-	-	-	111	120

Thickness	
Cross-section of duct [m^2]	S [mm]
up to 0.03	4
over 0.03 up to 0.13	5
over 0.13 up to 0.28	6
over 0.28 up to 0.50	7
over 0.50	8

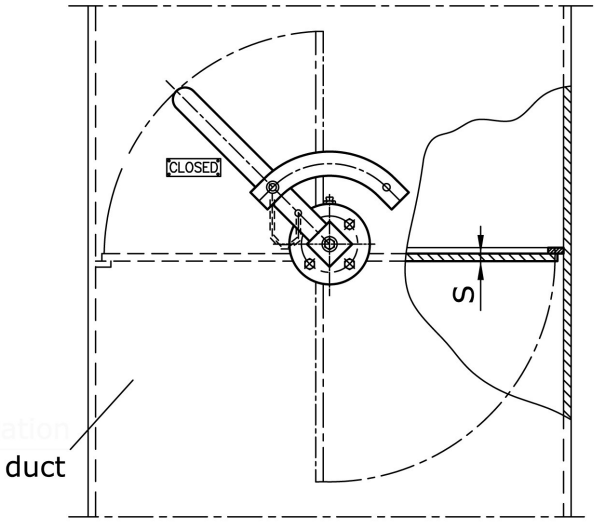
CLOSED
S
duct

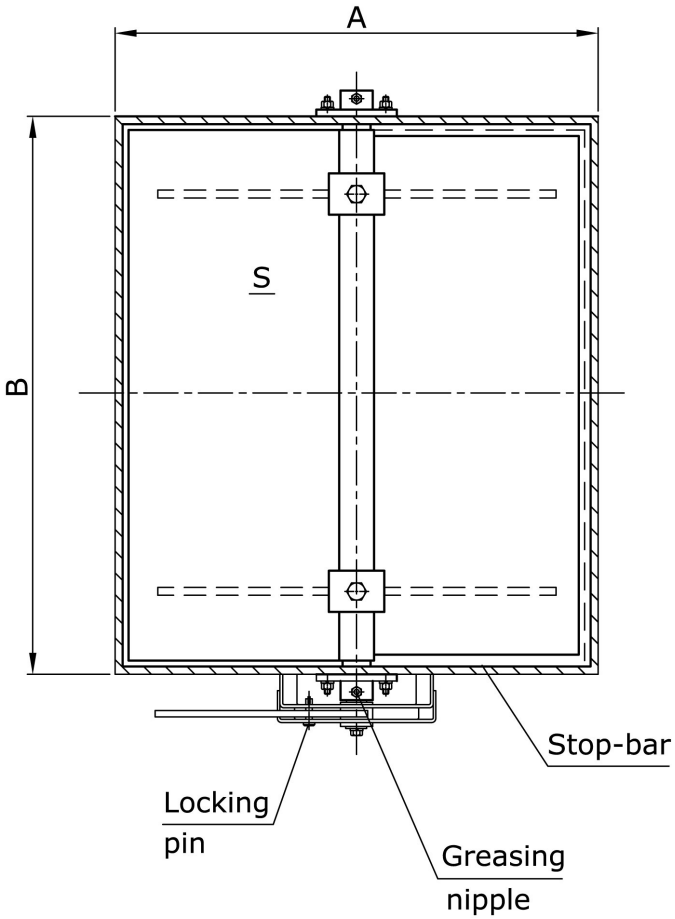
A
B
S
Stop-bar
Locking pin
Greasing nipple

DESCRIPTION

The GFD marine cut-off dampers are designed for installation in ventilation ducts of gas-protected spaces. They prevent the spread out of gas through the ventilation ductwork to the adjacent compartments. Dampers consist of flanged steel casing with isolating blade. Shaft bearings are made of stainless steel, piston release – brass. Dampers are provided with a piston release actuated with gas utilized for flooding of protected area. In case of gas appearance the piston releases a spring that closes the damper. A hand lever enables to shut the damper manually. Components of dampers are hot-dip galvanized.

MARKING

Example: GFD type damper with dimensions BxA=200x160mm: GFD 200x160

TECHNICAL SPECIFICATION & DIMENSIONS

Dimensions [mm]							Weight [kg]
A	B	L	G	S	T	V	
100	100	250	3	4	10	5	5.9
	160		3	4	10	5	6.5
	200		3	4	15	7	7.2
	250		3	5	15	7	7.7
160	200	300	3	5	15	7	8.7
	250		3	5	15	7	10.3
	315		4	5	15	7	12.5
	400		4	5	20	10	14.5
200	250	350	3	5	15	7	9.4
	315		4	5	20	10	13.4
	400		4	5	20	10	16.3
	500		5	6	20	10	19.8
250	400	400	4	6	20	10	18.4
	500		5	6	20	10	22.2
	630		5	7	20	10	26.7
315	400	450	4	5	20	10	20.3
	500		5	6	20	10	23.8
	630		5	6	20	10	29.1
	800		5	7	20	10	34.6
400	500	500	5	6	20	10	26.1
	630		5	6	20	10	33.4
	800		5	7	20	10	38.7

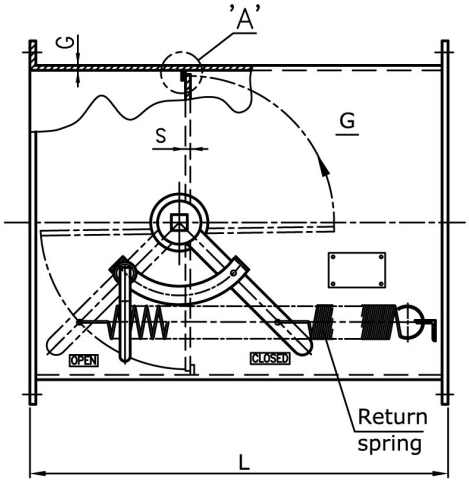
'A'
G
S
G
OPEN
CLOSED
Return spring
L

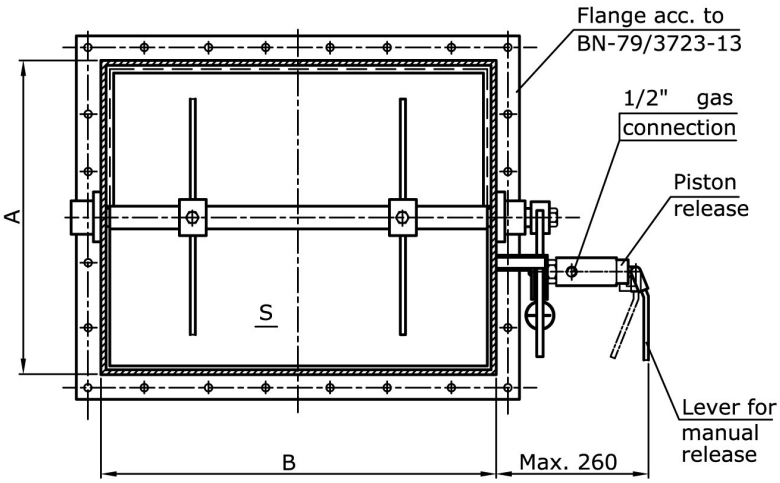
Flange acc. to BN-79/3723-13
1/2" gas connection
Piston release
A
S
Lever for manual release
B
Max. 260

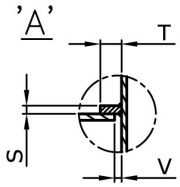
'A'
T
S
V

DESCRIPTION

The SD smoke dampers are destined for installation in ventilation and air conditioning systems of seagoing ships and offshore objects. They prevent the smoke and hot gases to spread-out through the pipe work in case of fire. SD smoke dampers consist of steel casing with spiro pipe connections on both ends and with manually operated, rotary flap peripheral sealed with rubber gasket. Actual open/closed position of damper is secured with fixing spring and labeled on the housing. Damper housing, flap and lever are made of mild steel, shafts and bushings of stainless steel. Tightness class is 3 acc. to EN 1751/3. Steel components of dampers are hot-dip galvanized.

MARKING

Example: SD type smoke damper of nominal diameter DN=160mm: SD-160

TECHNICAL SPECIFICATION & DIMENSIONS

Dimensions [mm]				Weight [kg]
DN	ØAxG	L	B	
80	86x3	120	110	1.08
100	106x3	120	125	1.32
125	131x3	130	140	1.95
160	166x3	140	160	2.68
200	206x3	160	185	4.05
250	256x3	180	210	6.10

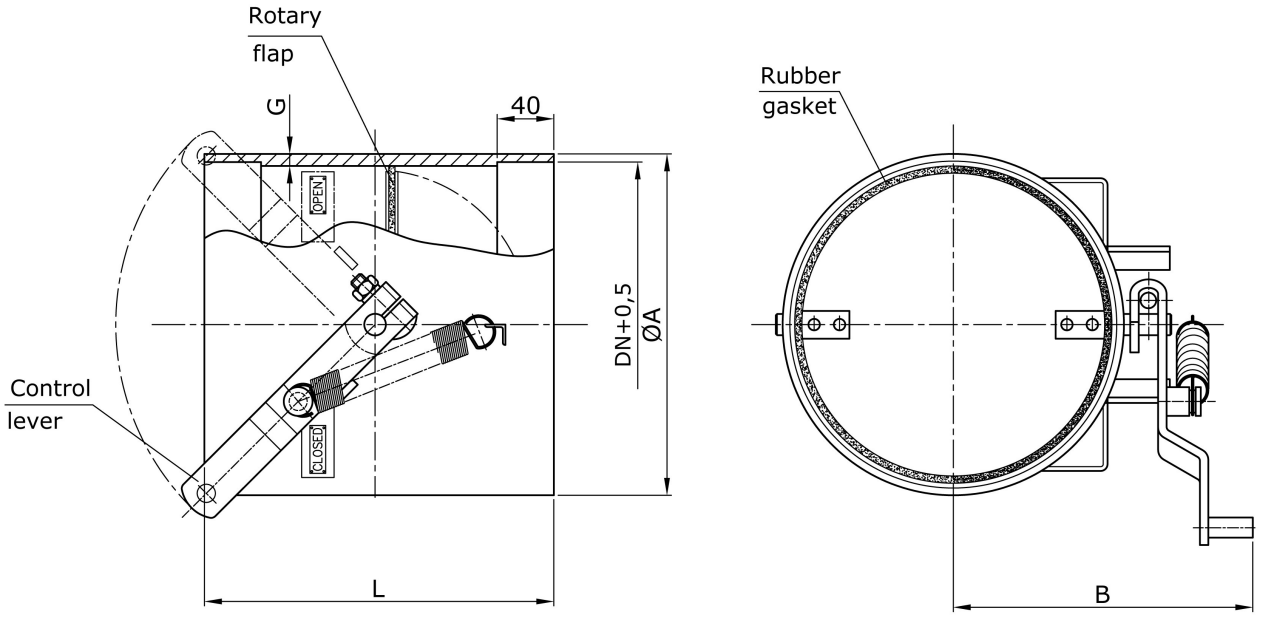

DESCRIPTION

The BLD dampers are used in offshore and marine applications to prevent backflow through ventilation ductwork system. The BLD dampers do not need an actuator or motor. Non-return dampers can be installed in rectangular or circular ducts, horizontally or vertically. If required, they can easily be set by adjusting the weight of each damper/installation. When the blades are in the open position, the device does not cause significant pressure loss, noise or flow disturbance. The damper has ATAX approved. Closed damper fulfills the leakage requirement of NORSK. Leakage class of closed damper accords to EN1751 class 2. Blades contain silicone seal to lower the leakage through blades. Maximum duct pressure for damper construction is 5000Pa and maximum air velocity 15m/s.
The BLD non-return dampers meet international standards for both rectangular (width B 200-1200mm and height H 200-1400mm, 1mm division) and circular ducts (Ø100-1250mm). Non-standard dimensions are available on request. Standard flange width is 27mm. Flanges and drilling are also available according to ISO 15138 standards. Standard frame material thickness is 3mm. Blades are made of two sheets, each being 0.8mm thick.

TECHNICAL SPECIFICATION & DIMENSIONS

- material frame: carbon steel (painted or galvanized) or stainless steel
- material blades: stainless steel or galvanized
- material maintenance-free bearings: stainless steel (bronze bearings optional)
- material shafts: stainless steel

Weights [kg] of standard BLD dampers

H [mm]	B [mm]										
	200	300	400	500	600	700	800	900	1000	1100	1200
200	8	10	12	14	16	17	16	20	22	24	25
300	11	13	15	17	19	20	22	24	26	28	29
400	13	15	17	19	21	23	24	27	29	30	32
500	15	18	20	22	24	26	28	30	32	34	36
600	17	20	22	24	26	29	31	33	35	37	40
700	20	22	25	27	30	32	34	37	39	41	44
800	22	24	27	29	32	34	37	40	42	44	47
900	24	27	30	32	35	38	41	43	46	48	51
1000	26	26	32	35	38	40	43	46	49	51	54
1100	29	32	35	38	41	44	47	50	53	55	58
1200	31	34	37	40	43	46	49	52	56	58	62
1300	33	37	40	43	46	50	53	56	59	62	66
1400	35	39	42	45	49	52	56	59	62	65	69

Note: weights do not include counter weights.

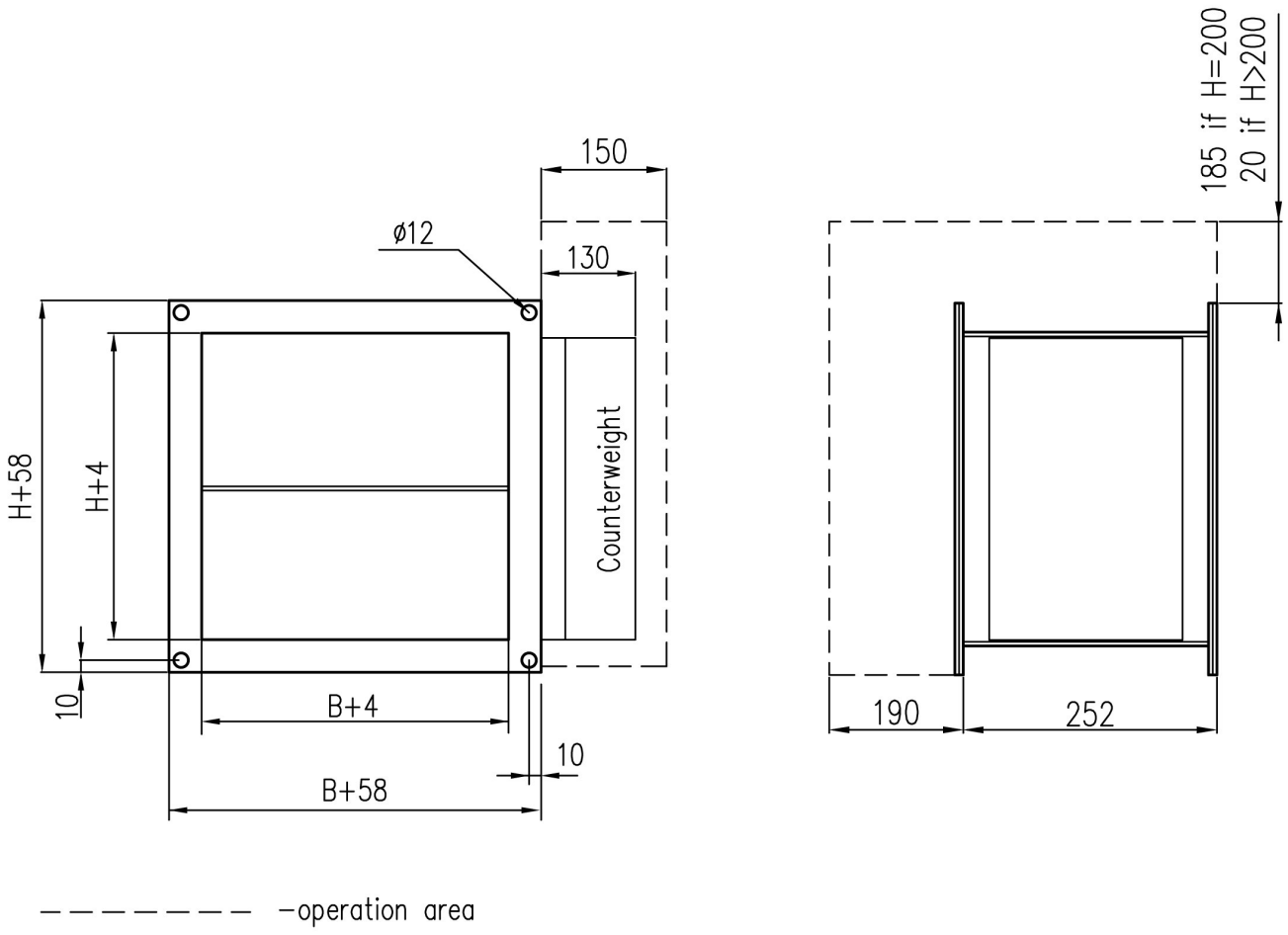
150
ø12
130
H+58
H+4
Counterweight
10
B+4
10
B+58
185 if H=200
20 if H>200
190
252
–operation area

DESCRIPTION

The BRD pressure-relief dampers are used in offshore and marine applications to prevent backflow through ventilation ductwork system. The pressure relief dampers do not need an actuator or motor. It can be installed in rectangular or circular ducts horizontally or vertically. Opening pressure can easily be set by adjusting weight of each damper/installation. Pressure relief dampers can be supplied with non-standard dimensions on request. Blades contain silicone seal to lower the leakage through them. Dampers got ATEX approved. Closed damper fulfills the leakage requirement of NORSK. Leakage class of closed damper accords to EN1751 class 2. Opening pressure is adjusted by changing the position of counterweight(s), which are included. Standard construction places weights on the right hand side. Opening pressure range is between 30Pa and 150Pa. Maximum duct pressure for damper construction is 5000Pa and maximum air velocity 15m/s.
The BRD pressure relief dampers meet international standards for both rectangular (width B 200-1200mm and height H 200-1400mm, 1mm division) and circular ducts (Ø100-1250mm). Standard flange width is 27mm. Flanges and drilling are also available according to ISO 15138 standards. Standard frame material thickness is 3mm. Blades are made of sheets, each 0.8mm thick.

TECHNICAL SPECIFICATION & DIMENSIONS

- material frame: carbon steel (painted or galvanized) or stainless steel
- material blades: galvanized steel or stainless steel
- material maintenance-free bearings: stainless steel (bronze bearings optional)
- material shafts: stainless steel

Weights [kg] of standard BRD dampers

H [mm]	B [mm]										
	200	300	400	500	600	700	800	900	1000	1100	1200
200	12	12	14	16	19	20	22	24	26	28	29
300	13	15	18	20	21	24	26	29	31	34	35
400	15	18	20	23	25	28	30	33	36	37	40
500	17	21	24	27	29	32	35	37	40	43	45
600	20	24	26	29	32	36	39	42	45	47	51
700	23	26	30	33	37	40	43	47	50	53	57
800	24	27	33	36	40	43	47	51	54	58	62
900	28	32	36	39	44	48	52	56	60	63	67
1000	30	34	39	43	48	51	55	60	64	68	72
1100	33	38	42	47	51	56	60	65	70	72	78
1200	35	40	45	50	54	59	64	69	74	78	84
1300	38	44	48	53	58	64	69	74	79	83	89
1400	40	46	51	56	62	67	73	78	83	88	94

Circular connection

D2 ØD [mm]	Weight [kg]	D2 ØD [mm]	Weight [kg]
200	15	630	45
250	17	800	63
315	21	1000	87
400	26	1250	116
500	36		

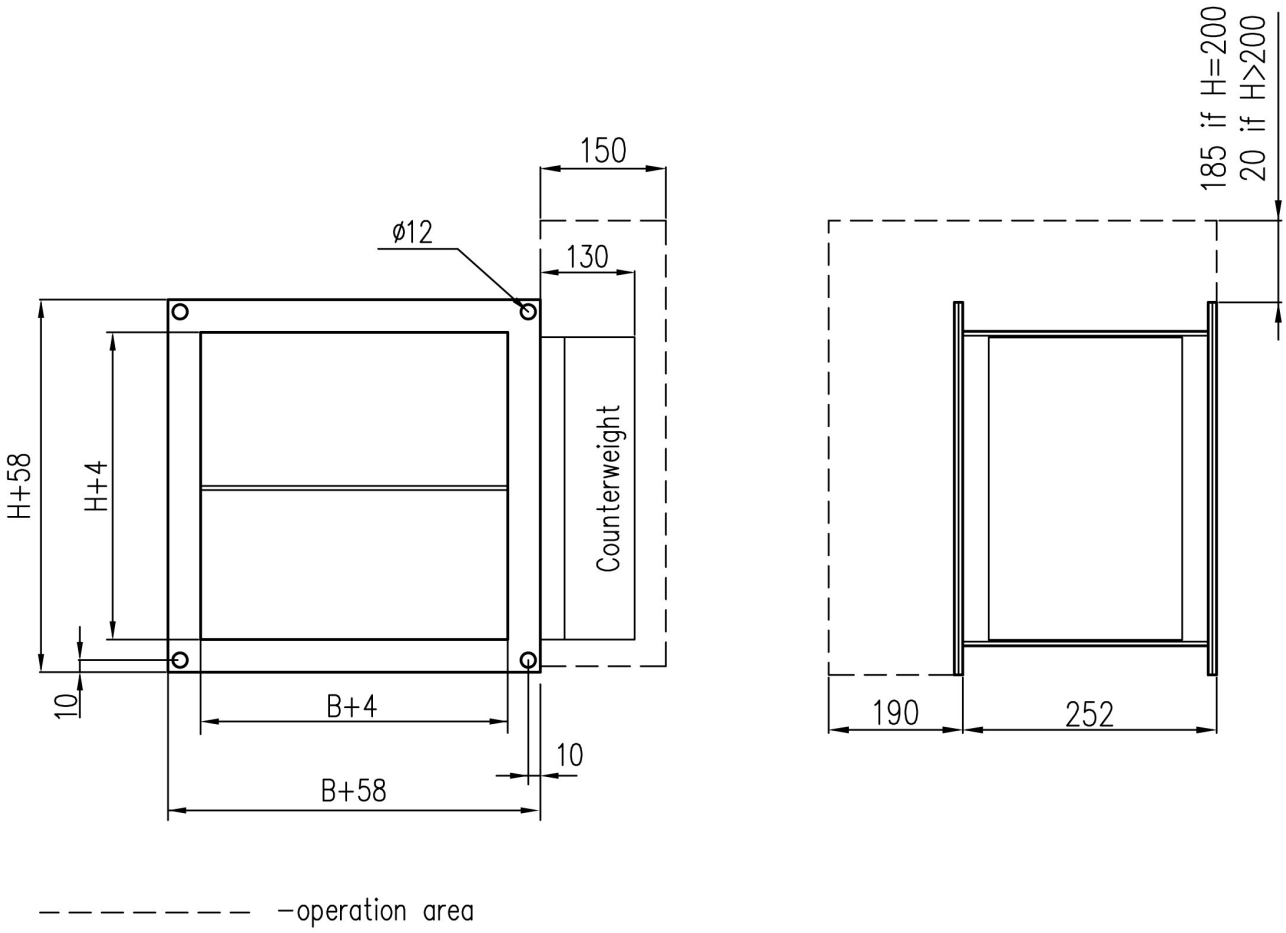
150
ø12
130
H+58
H+4
Counterweight
10
B+4
10
B+58
185 if H=200
20 if H>200
190
252
operation area

DESCRIPTION

The NRV non-return flaps are destined for installation in ventilation ductwork of seagoing ships and offshore objects. They prevent the backflow of air through the ventilation ducts. NRV non-return flaps consist of steel flanged casing with rotary shutting blade made of aluminum. Shaft bearings are made of stainless steel. NRV flaps must be installed in horizontal position. Allowable inclination of damper's plane is 10°. The air static pressure that opens the flap is 50-70Pa. Steel components of dampers are hot-dip galvanized.

MARKING

Example: NRV type flap with dimensions BxH=250x160mm: NRV-250x160

TECHNICAL SPECIFICATION & DIMENSIONS

Dimensions [mm]					Weight	Dimensions [mm]					Weight
H	B	L	G	S	[kg]	H	B	L	G	S	[kg]
100	100	240	2	1	3.5	200	500	370	3	1	12.0
	160				3.9	250	400	400	3	1	11.8
	200				4.4		500				13.3
	250				4.9		630				15.6
160	200	300	2	1	5.3	315	400	450	3	2	12.2
	250				6.1		500				14.1
	315		3		7.3		630				18.0
	400				9.1		800		4		19.8
200	250	370	2	1	5.5	400	500	560	3	2	17.3
	315		3		7.8		630				19.8
	400				9.7		800		4		22.5

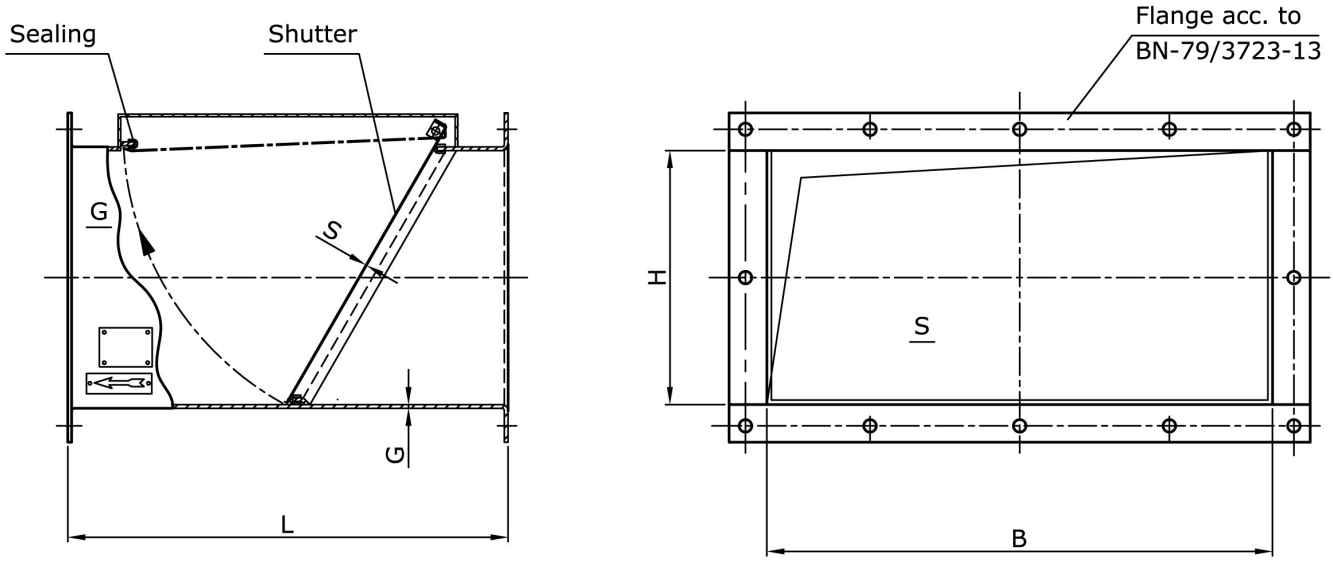

DESCRIPTION

The DASOL damper has aluminum lamellae which open during the air flow in one direction and close when air is draught back. When no air is flowing, the lamellae are maintained in vertical position using a spring. The damper is supplied with double EPDM gasket.

DIMENSIONS

Dimensions [mm]		Weight [kg]
ØD	L	
80	130	0.4
100	130	0.5
125	130	0.6
160	130	0.8
200	130	1.0
250	245	1.9
315	245	2.4

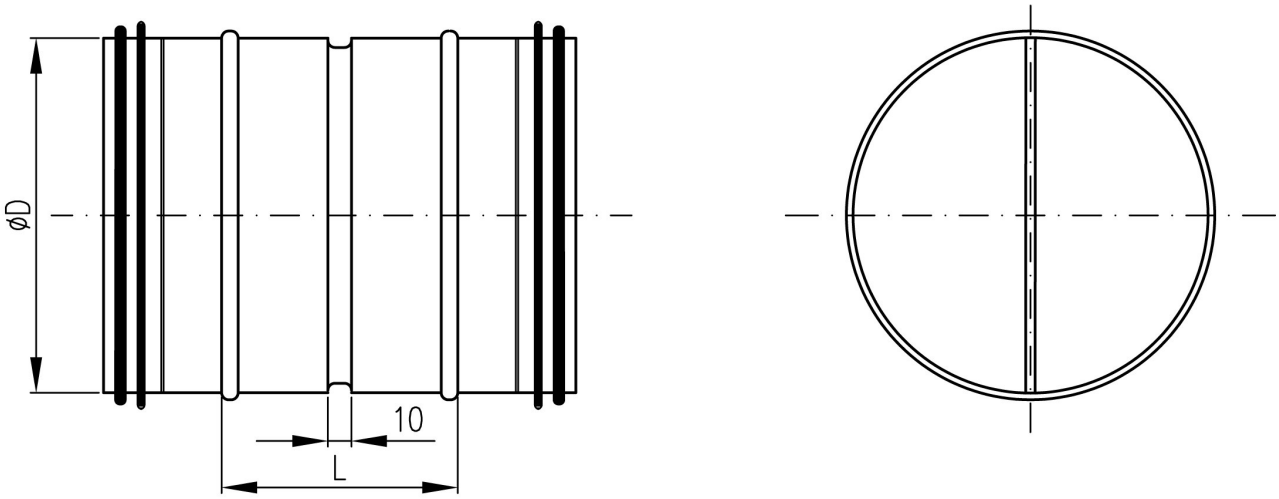

Certificate

Germanischer Lloyd Polen Sp. z o.o. Warsaw Division, 00-876 Warsaw, 58 Ogrodowa St.
herewith certifies that the company

Teknotherm Marine HVAC Sp. z o.o.

51 Wyspiańskiego St., PL-70-497 Szczecin, Poland

has established and maintains a Quality Management System relevant for:

Design, delivery, technical consulting and installation of air conditioning, ventilation and refrigeration systems for sea vessels and offshore units.

Germanischer Lloyd Polen Sp. z o.o. Warsaw Division has audited the company. Evidence was provided that the Quality Management System fulfills the requirements of the following standard:

ISO 9001:2008

The certificate is valid from **21.06.2012** until **15.05.2014**

Warsaw, 21.06.2012

Issue 2. Certified since May 2011

Certificate no. **QMS – 394 GL**

Dagmara Żygowska

PCA
Polskie Centrum Akredytacji
Certyfikacja Systemów Zarządzania
AC 112
QMS

TEKNOTHERM
MARINE HVAC

Szczecin, Poland: +48 91 433 18 00
St. Petersburg, Russia: +7 812 325 38 14
Istanbul, Turkey: +90 533 332 83 97

www.teknotherm.pl

tmh@teknotherm.no

GL ISO 9001
GL Systems Certification

© Copyright 2013 Teknotherm Marine HVAC Sp. z o.o.
Teknotherm Marine HVAC Sp. z o.o. reserves the right to change or modify the content of Product Catalogue with or without notice.