HVAC & Refrigeration Systems for Marine and Offshore

TEKNOTHERM

MARINE HVAC

PRODUCT CATALOGUE

LOUVERS

INDOOR CLIMATE IS OUR STENGTH

TEKNOTHERM
MARINE HVAC

- ✓ **Teknotherm Marine HVAC is strong and dynamic company which is perceived as a reliable and competent wide range marine and offshore air condition, ventilation, refrigeration systems supplier.**
- ✓ **We meet current and future requirements of our customers and their satisfaction is the most important aim for us.**
- ✓ **Realization of project around the world, from Germany through Norway and Russia to China, has given us irreplaceable and valuable experience.**
- ✓ **Our offer includes providing complete documentation and technical assistance during design stage, equipment installation, commissioning supervision and after-sales service.**
- ✓ **Teknotherm Marine HVAC has established and maintains a Quality Management System relevant for design, delivery, technical consulting and installation of air conditioning, ventilation and refrigeration systems for sea vessels and offshore units according to ISO 9001:2008.**

73-20 LOUVERS

CONTENT PAGE

1. MARINE VENTILATION LOUVERS WITH COVERS 4
2. MARINE VENTILATION LOUVERS WITHOUT COVERS 8
3. MARINE VENTILATION CIRCULAR LOUVERS 10
4. MARINE VENTILATION LOUVERS WITH COVER AND ROUNDED CORNER 12
5. DROPLET ELIMINATOR LOUVERS WITH COVERS 17
6. DROPLET ELIMINATOR LOUVERS WITHOUT COVERS 21
7. DROPLET ELIMINATOR LOUVERS WITH TILTABLE COVERS 23
8. DROPLET ELIMINATOR LOUVERS WITH FOLDED COVERS 24
9. VENTILATION LOUVERS WITH TILTABLE COVERS 25
10. VENTILATION LOUVERS WITH FOLDED COVERS 26
11. VENTILATION LOUVERS WITH MOVABLE BLADES 27
12. VENTILATION LOUVERS REMOTELY CONTROLLED 28
13. MARINE VENTILATION LOUVERS DAMPERS – LDF 29
14. MARINE VENTILATION LOUVER DAMPERS – LDG 30
15. VENTILATION LOUVERS WITH AIR FILTERS – AC 31
16. VENTILATION LOUVERS WITH AIR FILTERS – AF 32
17. MARINE VENTILATION LOUVER – VLA 33
18. MARINE VENTILATION LOUVER – VLB 34
19. MARINE VENTILATION LOUVER – VLH 35
20. MARINE VENTILATION LOUVER – VLD 36
21. MARINE DROPLET ELIMINATOR LOUVERS – DSA 37
22. MARINE DROPLET ELIMINATOR LOUVERS – DSA 1 38
23. MARINE DROPLET SEPARATOR LOUVERS – DSH 39
24. MARINE DROPLET SEPARATOR LOUVERS – DSD 40

DESCRIPTION

Ventilation louvers with weather-tight covers are destined for installation on steel or aluminum walls of superstructures on seagoing ships as air supply or exhaust units of ventilation systems. Construction is based on standard DIN 83409 with significant extending of size range. Louvers are provided with detachable blade frame that makes easy installation as well as access for maintenance.

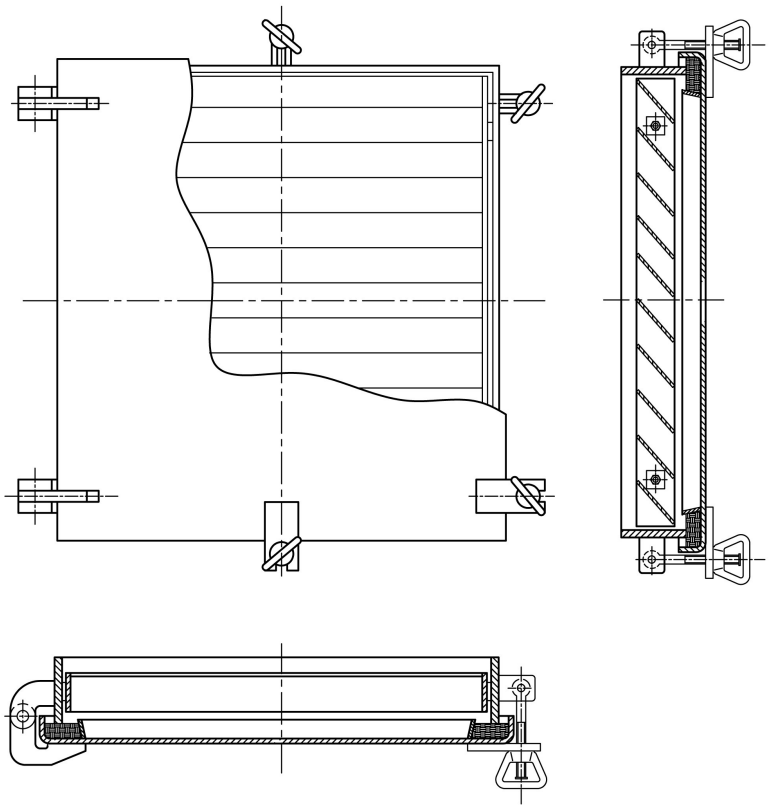

TECHNICAL SPECIFICATION & DIMENSIONS

- Steel louvers made of carbon steel St3St, with brass swing nuts, all bolts and pins of stainless steel.
- Aluminum louvers of alloy PA2, nuts, bolts and pins as above.
- Surface treatment: steel louvers frame and cover painted with marine epoxy paint SWA 7423-013-250, blade frame hot-dip galvanized. Aluminum louvers do not require any preservation.

Types:
A – square louver
B – rectangular louver, hinges on longer side
C – rectangular louver, hinges on shorter side

Sizes:
L_1xL_2 – dimension L_1 always is the length of side, on which cover hinges are fitted

Execution:
D – upwards opened cover
E – downwards opened cover
F – cover opened to the left
G – cover opened to the right

Fittings:
1 – louver with blade frame, without wire gauze
2 – louver with blade frame and wire gauze of 10mm mesh
3 – louver with wire gauze of 10mm mesh, without blade frame

Material (steel or aluminum) should be defined in order. Louvers are delivered with swing-out nut for fixing of weather-tight cover in open position. Louvers can be also delivered with non-standard dimensions on request.

Fitting 1

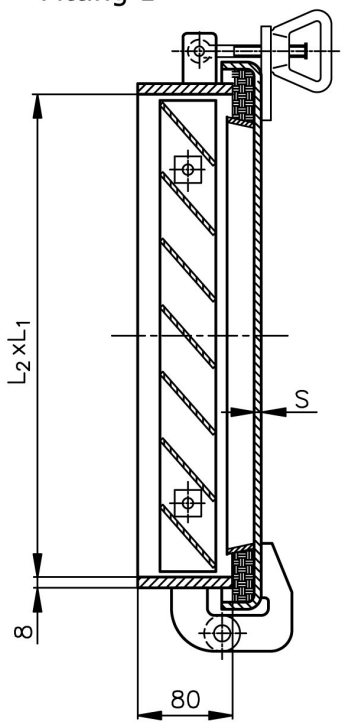

Fitting 2

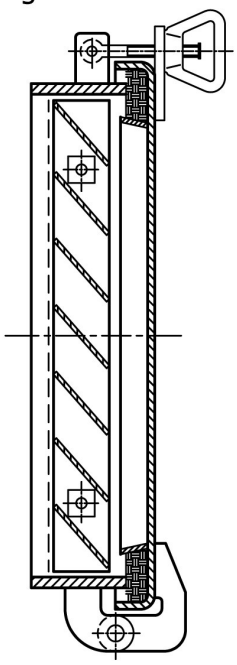

Fitting 3

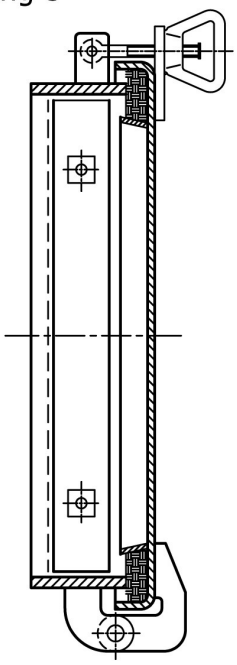

MARKING

Example: B type louver, size L_1xL_2=900x500, execution F, fittings 2, made of steel: B-900x500-F-2-St

ARRAGMENT OF HINGES AND SWING UNITS

Type A 250x250 to 500x500

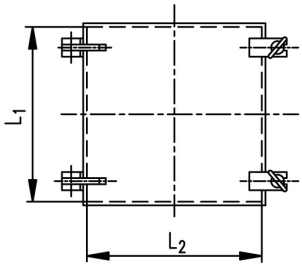

Type B 250x200 to 900x500

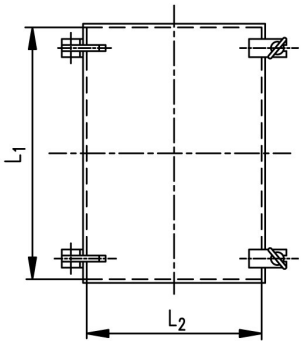

Type C 200x250 to 400x500

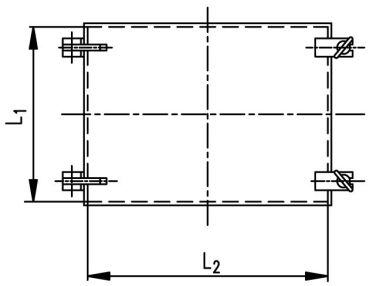

Type A 600x600 to 750x750

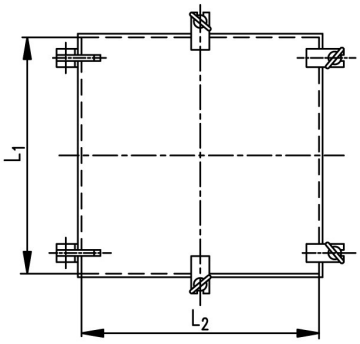

Type B 1000x600 to 1200x750

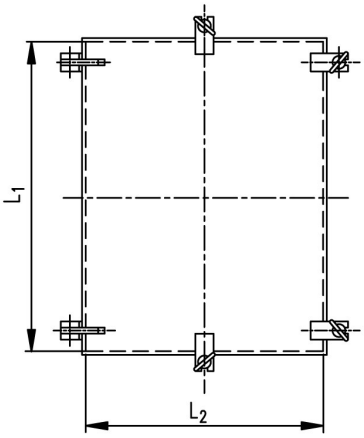

Type C 400x600 to 500x900

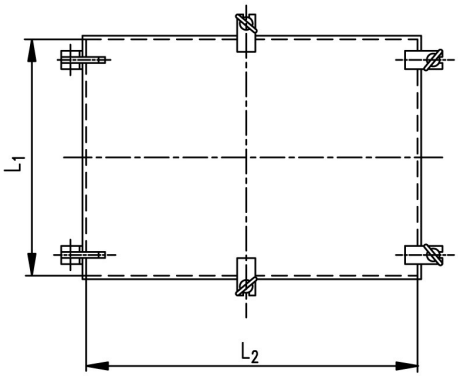

EXAMPLES OF MARKING

TYPE A - Square louvers

A-300x300-D

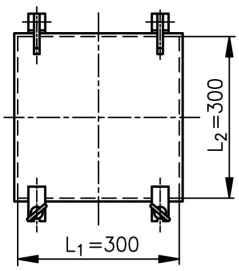

A-300x300-E

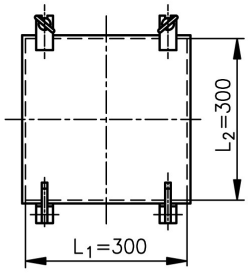

A-300x300-F

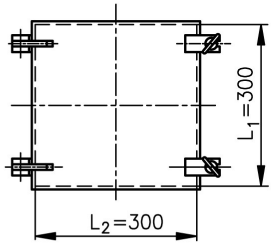

A-300x300-G

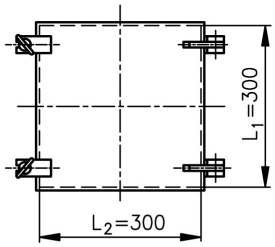

TYPE B - Rectangular louvers
Hinges on longer side

B-750x500-D

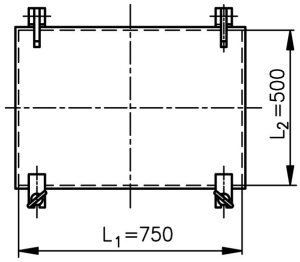

B-750x500-E

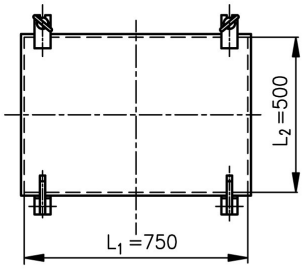

B-750x500-F

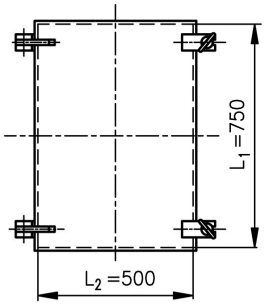

B-750x500-G

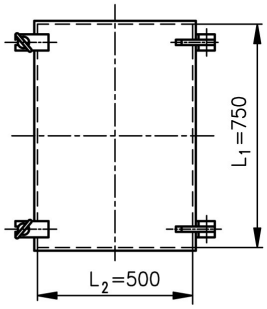

TYPE C - Rectangular louvers
Hinges on shorter side

C-500x750-D

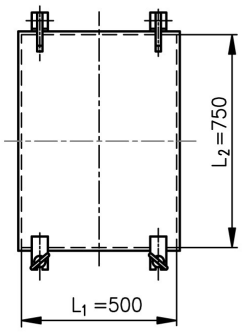

C-500x750-E

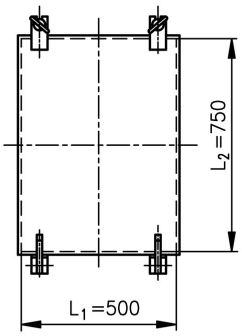

C-500x750-F

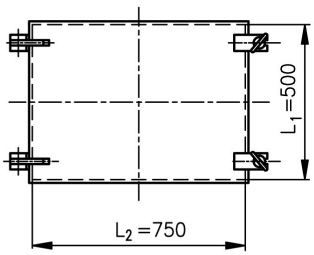

C-500x750-G

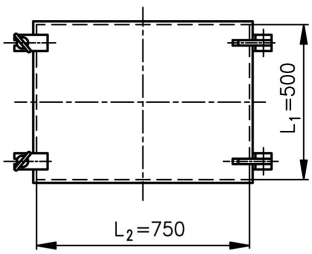

DESCRIPTION

Ventilation louvers without weather-tight cover are destined for installation on steel or aluminum walls of superstructures on seagoing ships as air supply or exhaust units of ventilation systems. Construction is based on standard DIN 83409 with significant extending of size range. Louvers are provided with detachable blade frame that makes easy installation as well as access for maintenance. Louvers may be fitted in positions where weather-tight closing devices (Convention ILL 1966) are not required. Regulations of SOLAS for fire closing of external ventilation openings are to be observed. Louvers can be also delivered with non-standard dimensions on request.

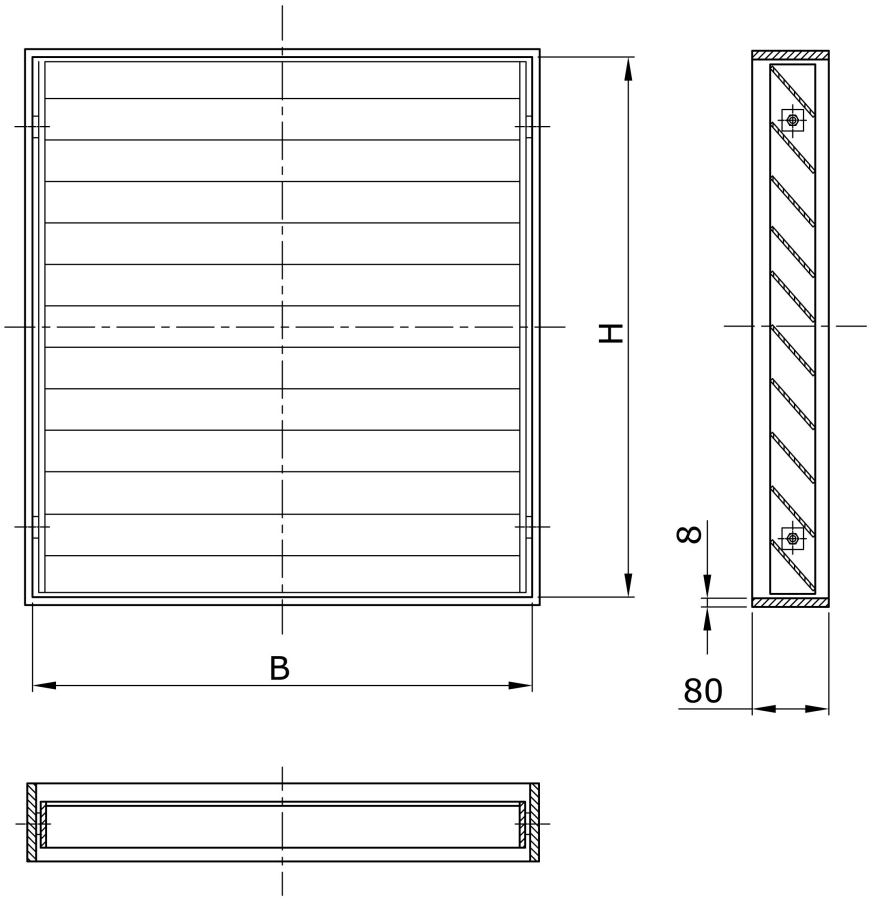

TECHNICAL SPECIFICATION & DIMENSIONS

- Steel louvers made of carbon steel St3St.
- Aluminum louvers of alloy PA2.
- Surface treatment: steel louvers frame and cover painted with marine epoxy paint SWA 7423-013-250, blade frame hot-dip galvanized. Aluminum louvers do not require any preservation.

Fittings:
1 – louver with blade frame, without wire gauze
2 – louver with blade frame and wire gauze of 10mm mesh
3 – louver with wire gauze of 10mm mesh, without blade frame

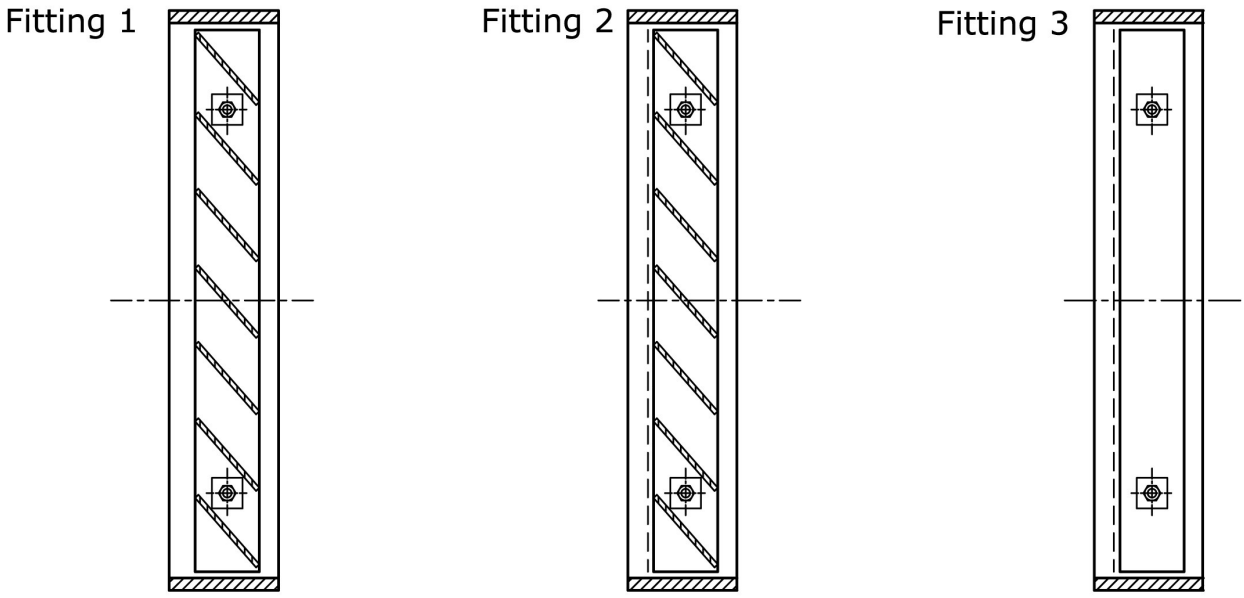

MARKING

Example: louver without cover, size L_1xL_2=900x500, fittings 2, made of steel: B-900x500-F-2-St

DESCRIPTION

Ventilation louvers with weather-tight cover are destined for installation on steel or aluminum walls of superstructure on seagoing ships as air supply or exhaust units of ventilation systems. Frames, blades and covers are made of mild steel St3Sx or aluminum alloy PA2. Nuts of hinges and closing devices – brass, blots and shafts are made of stainless steel and packing of covers – rubber profile type PIII 12/8. Steel louvers frame and cover painted with marine epoxy paint SWA 7423-013-250. Aluminum louvers do not require any preservation.

TECHNICAL SPECIFICATION & DIMENSIONS

Nominal diameters: DN=100, 125, 160, 200 mm.

Material:
S – steel louver
A – aluminum louver

Executions:
D – with downwards opened cover
G – with upwards opened cover
L – with cover opened to the left
P – with cover opened to the right
N – louver without cover

Dimensions [mm]			Weight [kg]	
DN	L	MD	Steel	Al
100	235	M8	3.5	1.6
125	280	M8	4.2	1.9
160	325	M8	5.2	2.2
200	390	M10	7.5	3.1

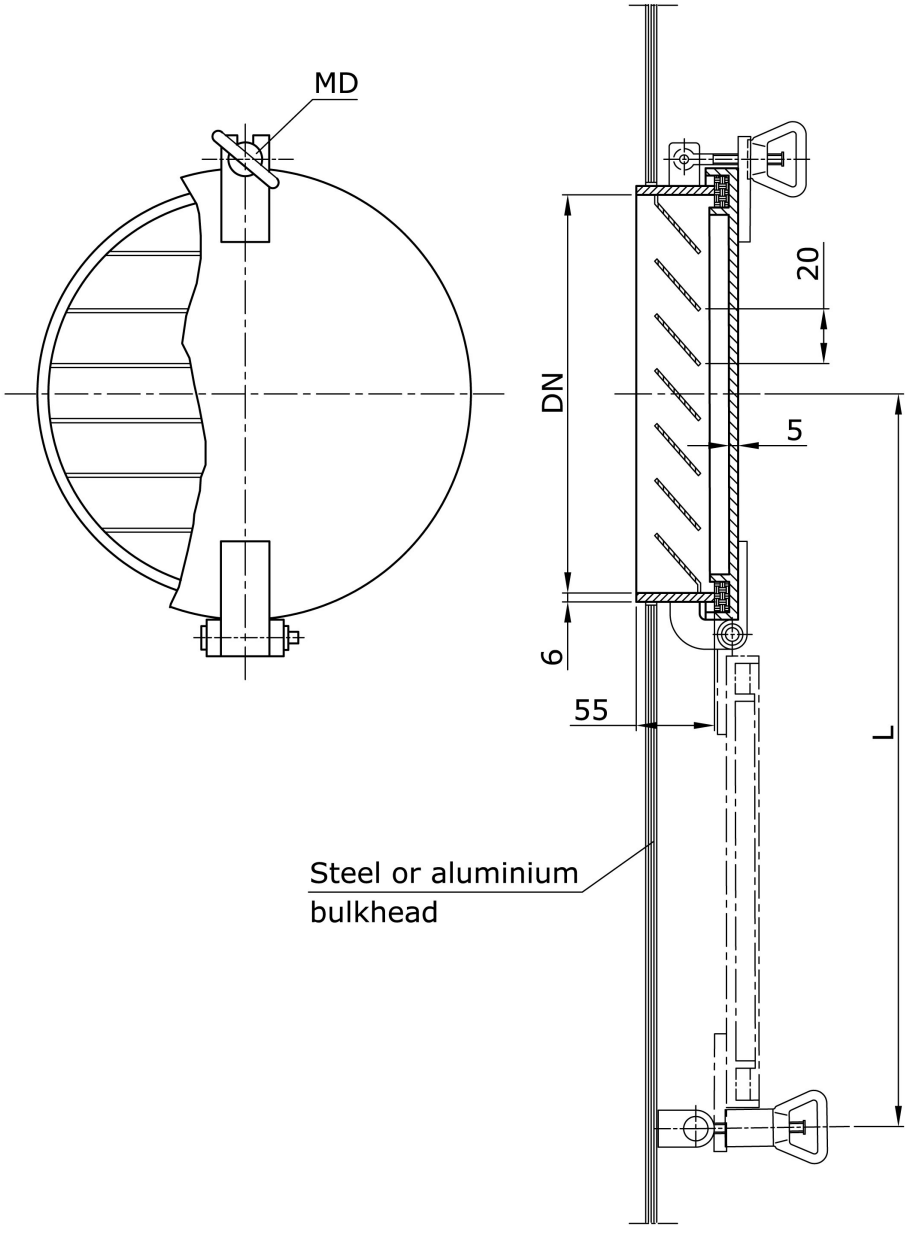

MARKING

Example: circular louver of DN=100mm, made of steel S and with downwards opened cover D: CIRCULAR LOUVER 100-SD

DESCRIPTION

Ventilation louvers with weather-tight covers are destined for installation on steal bulkheads of superstructure of seagoing vessels as air aspirating or discharge units of ventilation systems. Frames, blades and covers are made of mild steel St3Sx. Detachable protective 12x12 wire guard is made of steel. Nuts of closing devices and hinges – brass, bolts and shafts of stainless steel. Packing of covers – rubber profile type R3III30 acc. to standard PN-78/W-88061. Size of hinges and closing devices is M12 for louver 500x500 and M16 for larger. Elements of louvers are made of mild steel and coated two times with epoxy primer SWA7423-026-950 or equivalent. Protective wire guard – galvanized. Louvers are supplied with one or two swing-out bolts for fastening of cover in open position. On request louvers may be supplied made of aluminum or with dimensions other than from the table. Louvers are delivered with unglued cover packing profile.

TECHNICAL SPECIFICATION & DIMENSIONS

Types:
- louver without cover
- louver with cover

Executions (applies to louvers with covers)**:**
G – louver with cover with hinges on upper edge
D – louver with cover with hinges on lower edge
P – louver with cover with hinges on right edge
L – louver with cover with hinges on left edge

Marking axb	Dimension c for execution [mm]		s [mm]	g [mm]	Weight [kg] Type of louver			Effect. sect. area [m^2]
					Without cover	w/ cover		
	G, D	P, L				G, D	P, L	
200x250	654	554	5	5	6.3	12.1	12.8	0.018
250x200	557	654	5	5	6.3	12.8	12.8	0.018
250x250	654	654	5	5	7.2	14.5	14.5	0.025
250x300	754	654	6	5	8.1	16.2	16.2	0.033
250x350	854	654	6	5	9.0	18.8	17.9	0.041
300x250	654	754	6	5	8.1	16.2	16.2	0.033
300x300	754	754	6	5	9.0	18.1	18.1	0.043
300x350	854	754	6	5	9.9	20.8	19.9	0.053
300x400	954	754	6	5	11.0	23.0	22.1	0.063
300x450	1062	752	6	7	14.5	27.4	27.5	0.072
350x250	654	854	6	5	9.0	18.8	17.9	0.041
350x300	754	854	6	5	9.9	20.8	19.9	0.053
350x350	854	854	6	5	11.0	23.0	22.1	0.065
350x400	954	854	6	6	11.9	25.0	25.3	0.076
350x450	1062	862	6	7	15.8	31.0	30.1	0.088
400x300	754	954	6	5	11.0	23.0	22.1	0.063
400x350	854	954	6	6	11.9	25.0	25.3	0.076
400x400	954	954	6	6	13.1	27.3	27.4	0.090
400x450	1062	962	6	7	17.2	33.8	33.9	0.104
400x500	1162	962	6	7	18.5	36.2	35.3	0.117
450x300	762	1062	6	7	14.5	27.4	27.5	0.072
450x350	862	1062	6	7	15.8	30.0	30.1	0.088
450x400	962	1062	6	7	17.2	33.8	32.9	0.104
450x450	1062	1062	6	7	18.5	36.3	35.4	0.119
450x500	1162	1062	6	7	19.8	38.9	38.0	0.135
500x400	962	1162	6	7	18.5	36.2	35.3	0.117
500x450	1062	1162	6	7	19.8	38.9	38.0	0.135
500x500	1162	1162	6	7	22.5	44.3	43.4	0.152
500x600	1372	1172	7	7	25.3	52.6	51.2	0.187
500x750	1672	1172	8	7	30.3	70.3	68.9	0.24
500x900	1984	1184	8	8	42.5	89.1	87.5	0.295
500x1200	2584	1184	8	8	53.1	112.9	113.2	0.398
500x1400	-	1184	8	8	60.3	-	128.9	0.486
600x500	1172	1372	6	7	25.6	52.6	51.2	0.187
600x1000	-	1384	8	8	50.5	-	108.7	0.402
600x1500	-	1384	8	8	69.6	-	152.0	0.616
650x1800	-	1484	8	8	84.4	-	186.9	0.813
700x1200	-	1584	8	8	63.5	-	145.7	0.577
750x500	1172	1672	8	7	30.3	68.7	68.7	0.240
800x1500	-	1784	8	8	85.6	-	189.1	0.843
800x1800	-	1784	8	8	99.5	-	220.4	1.018
900x500	1184	1984	8	8	42.5	87.5	87.5	0.293
1000x600	-	2184	8	8	50.5	-	106.8	0.402
1000x1800	-	2184	8	8	112.4	-	239.5	1.293
1200x1800	-	2184	8	8	125.2	-	297.5	1.564

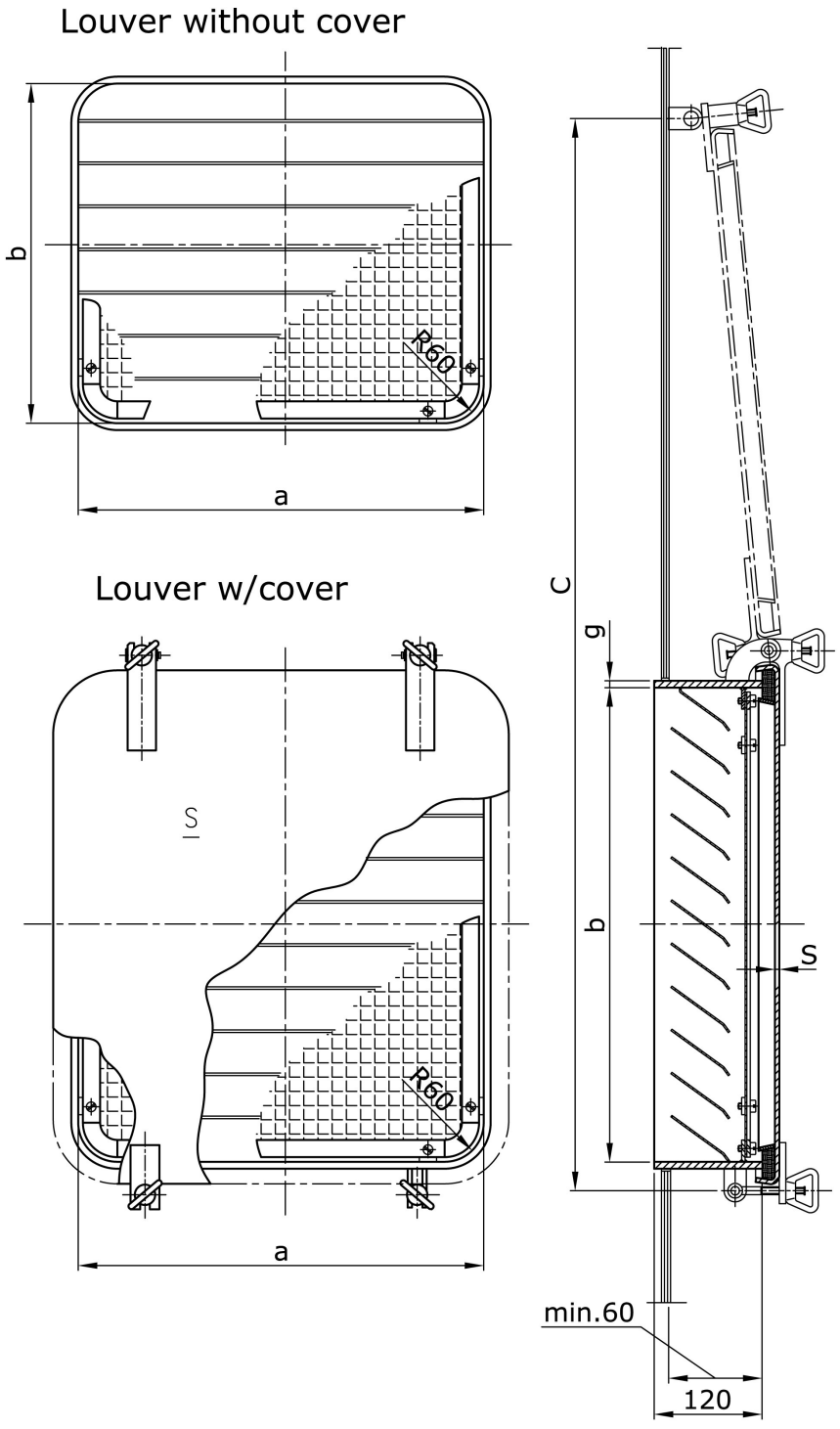

MARKING

Example: louver with cover of size 250x200, of G execution: LOUVER WITH COVER 250x200G

Execution PxL

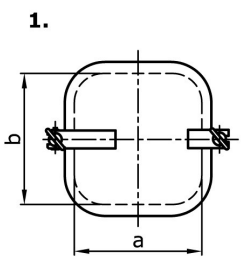

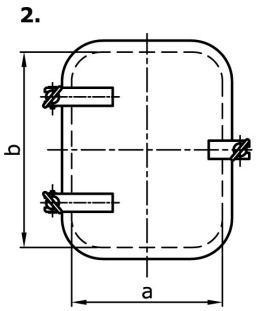

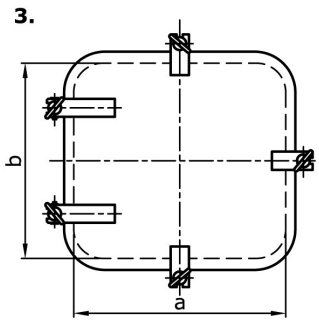

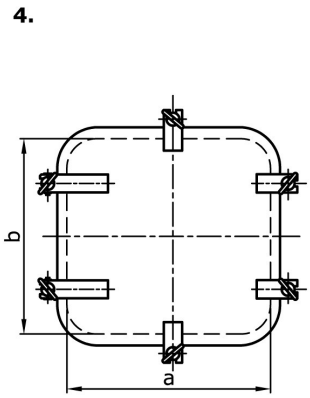

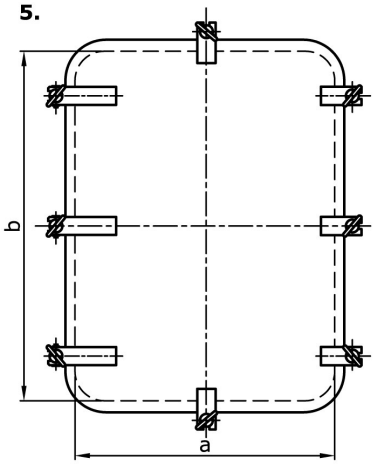

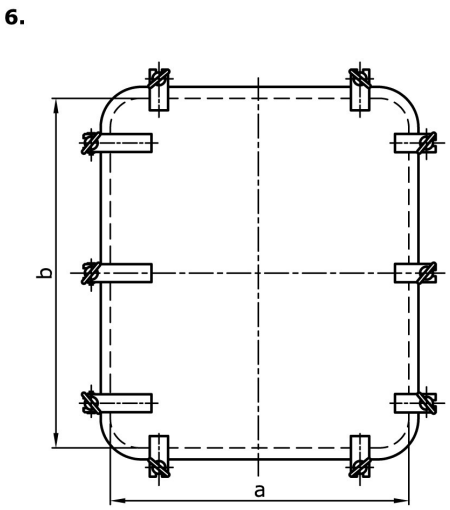

1. axb=250x200
2. axb=200x250
   250x250
   250x300
   250x350
   300x250
   300x300
   300x350
   300x400
   350x250
   350x300
   350x350
   400x300
3. axb=300x450
   350x400
   axb=350x450
   400x350
   400x400
   400x450
   400x500
   450x300
   450x350
   450x400
   450x450
   450x500
   500x400
   500x450
   500x500
   500x600
   600x500
4. axb=500x750
   500x900
   750x500
   900x500
   1000x600
5. axb=500x1200
   500x1400
   600x1000
   600x1500
   650x1800
   700x1200
   800x1500
   800x1800
6. axb=1000x1800
   1200x1800

Execution GxD

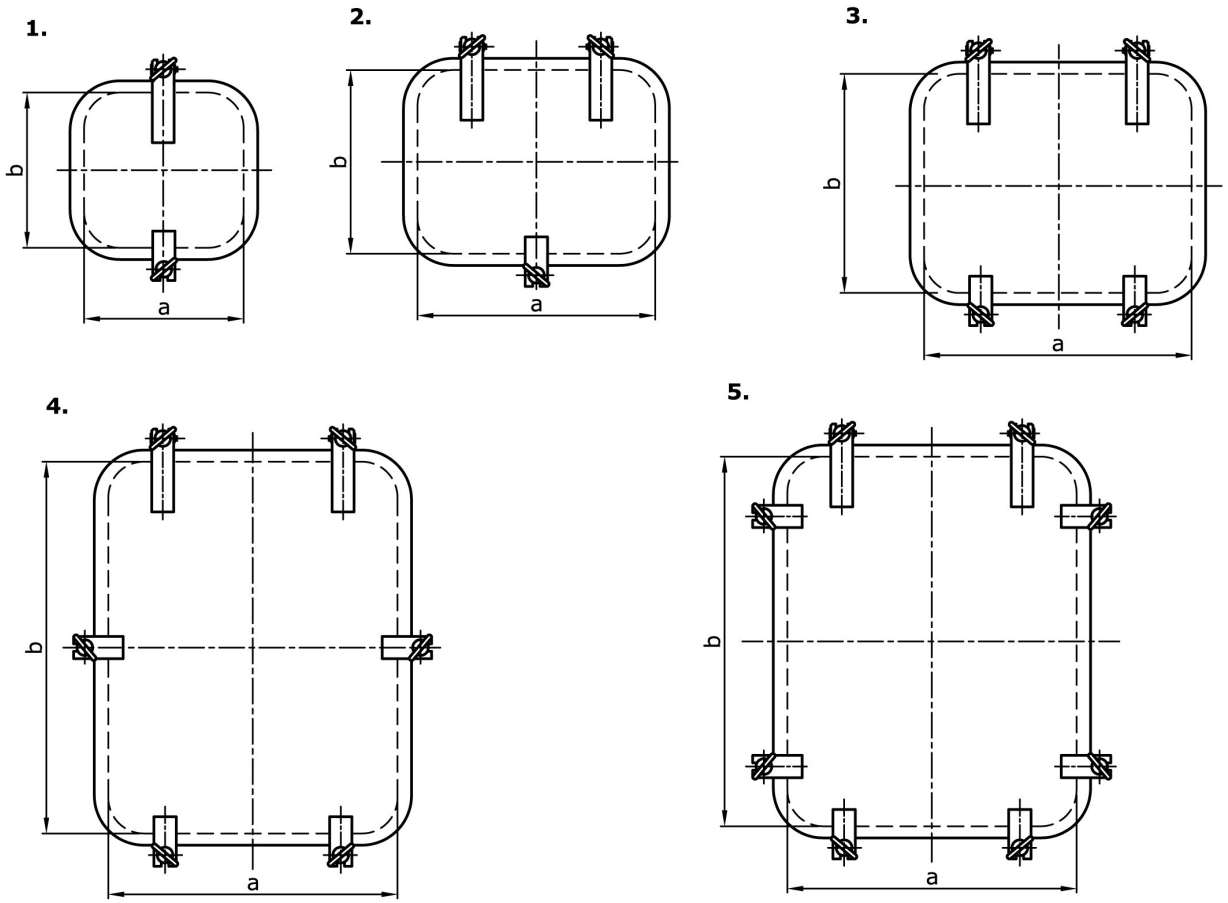

1. axb=200x250
2. axb=250x200
   250x250
   250x300
   300x250
   300x300
3. axb=250x350
   300x350
   300x400
   300x450
   350x250
   350x300
   axb=350x350
   350x400
   400x300
   400x350
   400x400
   450x300
   450x350
4. axb=350x450
   400x450
   400x500
   450x400
   450x450
   axb=450x500
   500x400
   500x450
   500x500
   500x600
   600x500
   750x500
   900x500
5. axb=500x750
   500x900
   500x1200

DESCRIPTION

Marine ventilation louvers with droplets eliminators and weather-tight covers are destined for installation on steel or aluminum walls of superstructures on seagoing ships as air supply units of ventilation systems. Construction is based on standard DIN 83409 with significant extending of size range. Louvers are provided with detachable blade frame that makes easy installation as well as access for maintenance. Frame consists of specially shaped, vertical, high-efficiency droplet separating profiles.

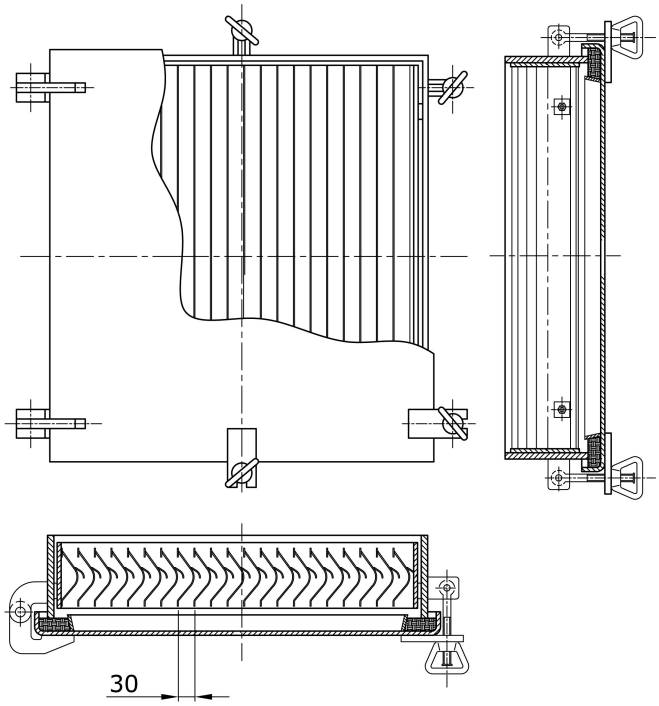

TECHNICAL SPECIFICATION

- Steel louvers made of carbon steel St3St, with brass swing nuts, all bolts and pins of stainless steel. Droplet separating profiles – stainless steel.
- Aluminum louvers of alloy PA2, nuts, bolts and pins as above. Droplet separating profiles – stainless steel.
- Surface treatment: steel louvers frame and cover painted with marine epoxy paint SWA 7423-013-250, blade frame hot-dip galvanized. Aluminum louvers do not require any preservation.

Types:
A – square louver
B – rectangular louver, hinges on longer side
C – rectangular louver, hinges on shorter side

Sizes:
L_1xL_2 – dimension L_1 always is the length of side, on which cover hinges are fitted

Execution:
D – upwards opened cover
E – downwards opened cover
F – cover opened to the left
G – cover opened to the right

Fittings:
4 – louver with blade frame, without wire gauze
5 – louver with blade frame and wire gauze of 10mm mesh

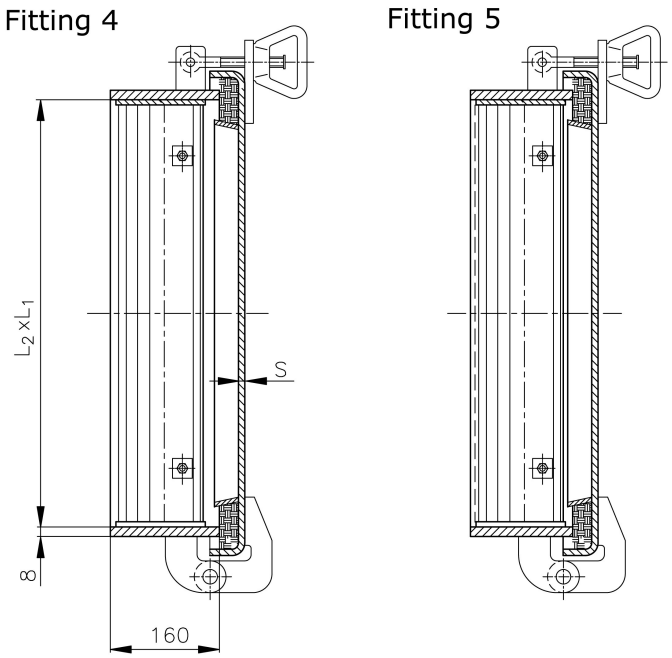

PERFORMANCE CHART

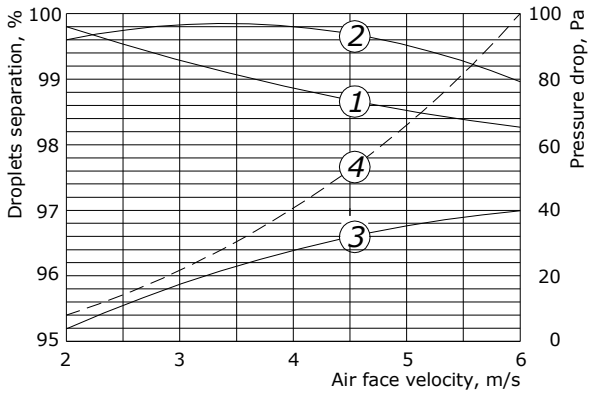

1 - rain, droplets 100 um, 10 litres/min/m^2
2 - rain, droplets 100 um, 25 litres/min/m^2
3 - fog, droplets 30 um
4 - pressure drop, Pa

ARRAGMENT OF HINGES AND SWING UNITS

Type A 250x250 to 500x500

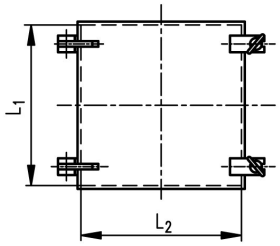

Type B 250x200 to 900x500

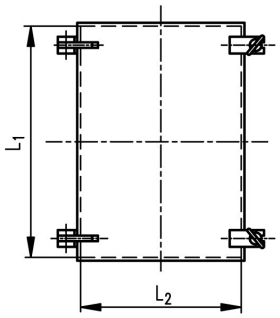

Type C 200x250 to 400x500

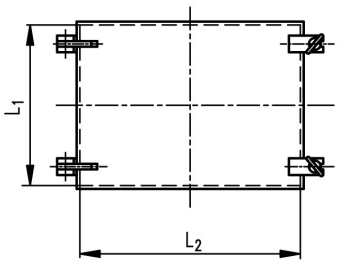

Type A 600x600 to 750x750

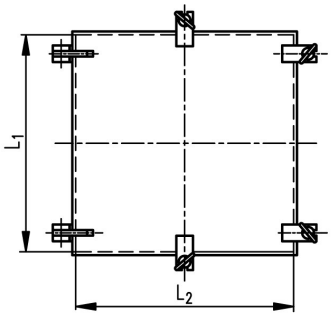

Type B 1000x600 to 1200x750

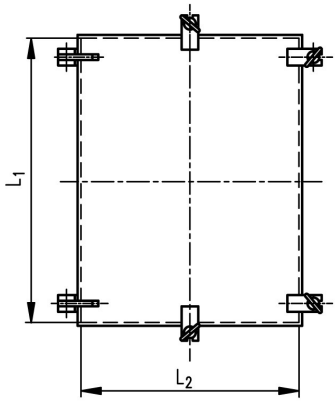

Type C 400x600 to 500x900

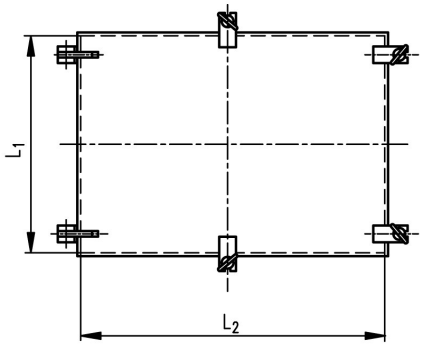

EXAMPLES OF MAKING

TYPE A - Square louvers

A-300x300-D

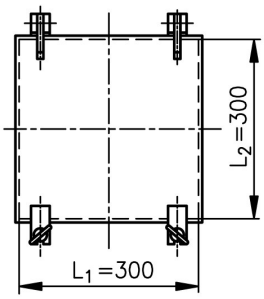

A-300x300-E

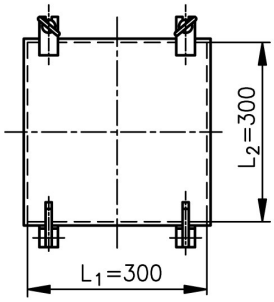

A-300x300-F

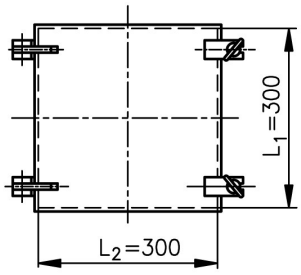

A-300x300-G

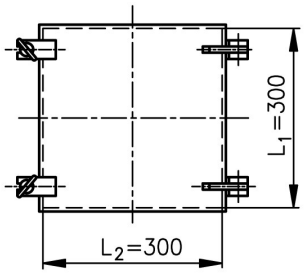

TYPE B - Rectangular louvers
Hinges on longer side

B-750x500-D B-750x500-E B-750x500-F B-750x500-G

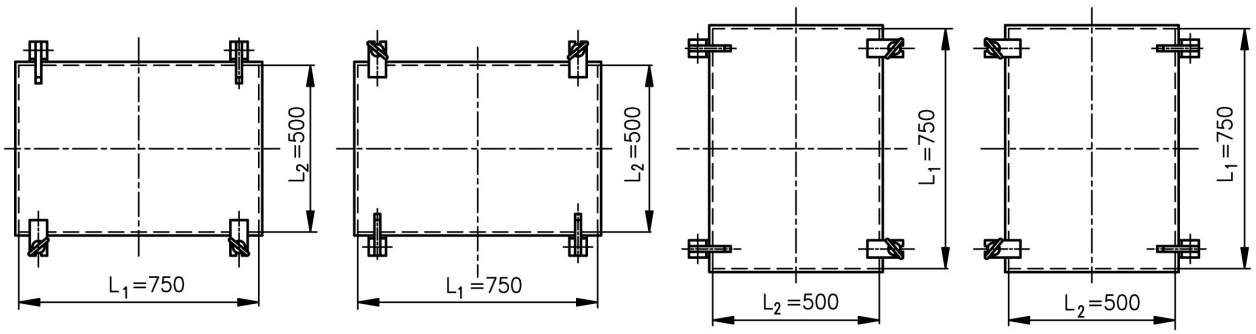

TYPE C - Rectangular louvers
Hinges on shorter side

C-500x750-D C-500x750-E C-500x750-F C-500x750-G

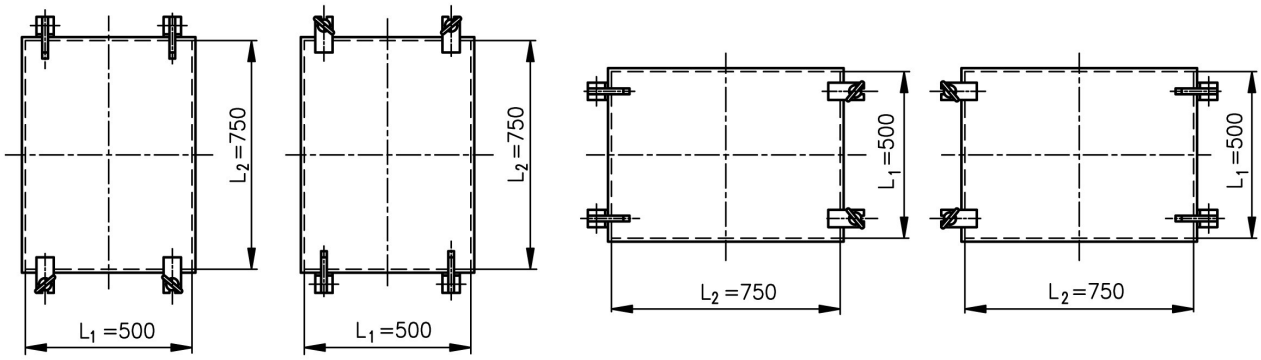

Material (steel or aluminum) should be defined in order. Louvers are delivered with swing-out nut for fixing of weather-tight cover in open position. Louvers can be also delivered with non-standard dimensions on request.

MARKING

Example: B type louver, of size L_1xL_2=900x500, execution F, fittings 4, made of steel: DROPLET ELIMINATOR LOUVER B-900x500-F-4-St

DESCRIPTION

Marine ventilation louvers with droplets eliminators are destined for installation on steel or aluminum walls of superstructures on seagoing ships as air supply units of ventilation systems. Construction is based on standard DIN 83409 with significant extending of size range. Louvers are provided with detachable blade frame that makes easy installation as well as access for maintenance. Frame consists of specially shaped, vertical, high-efficiency droplet separating profiles. Louvers may be fitted in positions where weather tight closing devices (Convention ILL 1966) are not required. Regulations of SOLAS for fire closing of external ventilation openings are to be observed. Louvers can be also delivered with non-standard dimensions on request.

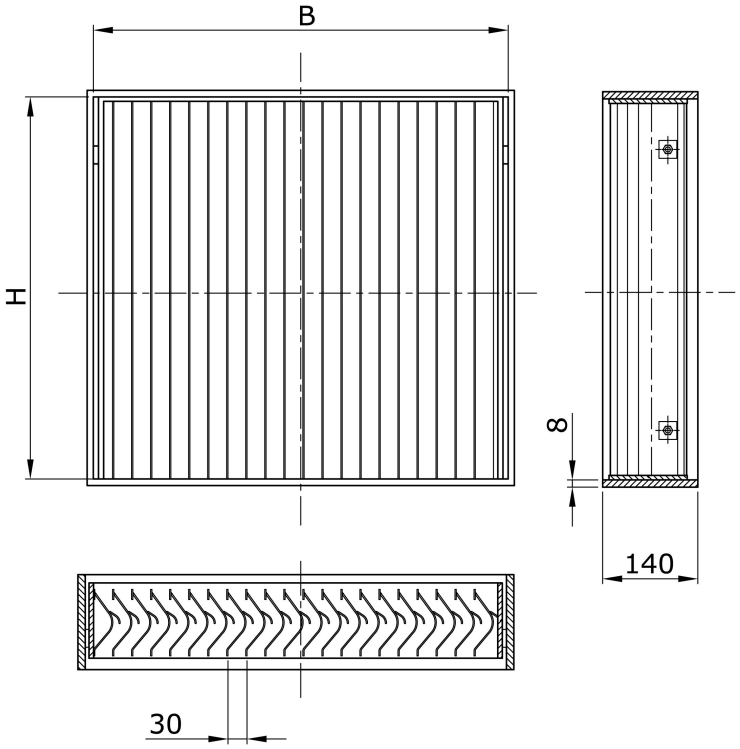

TECHNICAL SPECIFICATION & DIMENSIONS

- Steel louvers made of carbon steel St3St, with brass swing nuts, all bolts and pins of stainless steel. Droplet separating profiles – stainless steel.
- Aluminum louvers of alloy PA2, nuts, bolts and pins as above. Droplet separating profiles – stainless steel.
- Surface treatment: steel louvers frame and cover painted with marine epoxy paint SWA 7423-013-250, blade frame hot-dip galvanized. Aluminum louvers do not require any preservation.

Fittings:
4 – louver with blade frame, without wire gauze
5 – louver with blade frame and wire gauze of 10mm mesh

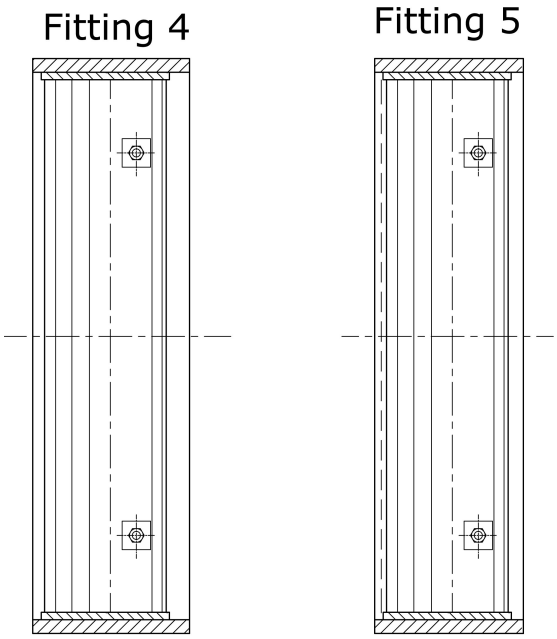

PERFORMANCE CHART

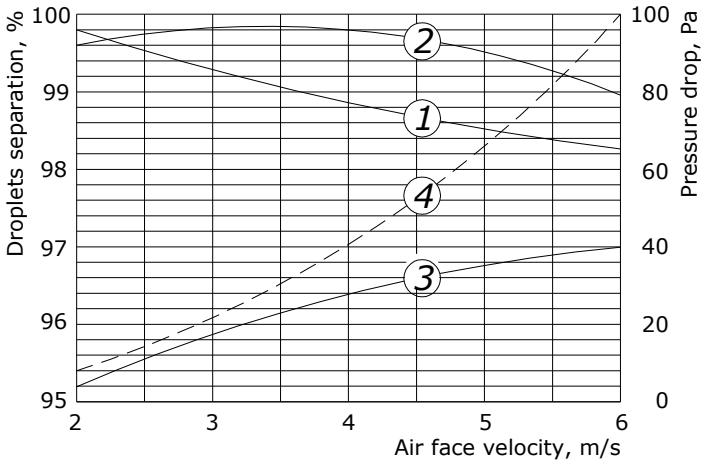

1 - rain, droplets 100 um, 10 litres/min/m^2
2 - rain, droplets 100 um, 25 litres/min/m^2
3 - fog, droplets 30 um
4 - pressure drop, Pa

MARKING

Example: lover of size BxH=900x500, with fittings 5, made of steel: 900x500-5-St

DESCRIPTION

Droplet eliminator louvers with tiltable weather-tight covers are destined for installation on steel or aluminum walls of superstructure on seagoing ships as air supply units of ventilation systems. Construction is based on standard DIN 83409 norm with significant extending of size range. Louvers are provided with detachable blade frame that makes easy installation as well as access for maintenance. Arrangement of covers provides an additional protection against rain and sea water splashes as well as savings of space required for fitting of cover in open position.
Steel louvers frame and cover are painted with marine epoxy paint SWA 7423-013-250, blade frame is hot-dip galvanized. Aluminum louvers do not require any preservation.

TECHNICAL SPECIFICATION & DIMENSIONS

Fittings:
4 – louver with blade frame, without wire gauze
5 – louver with blade frame and wire gauze of 10mm mesh

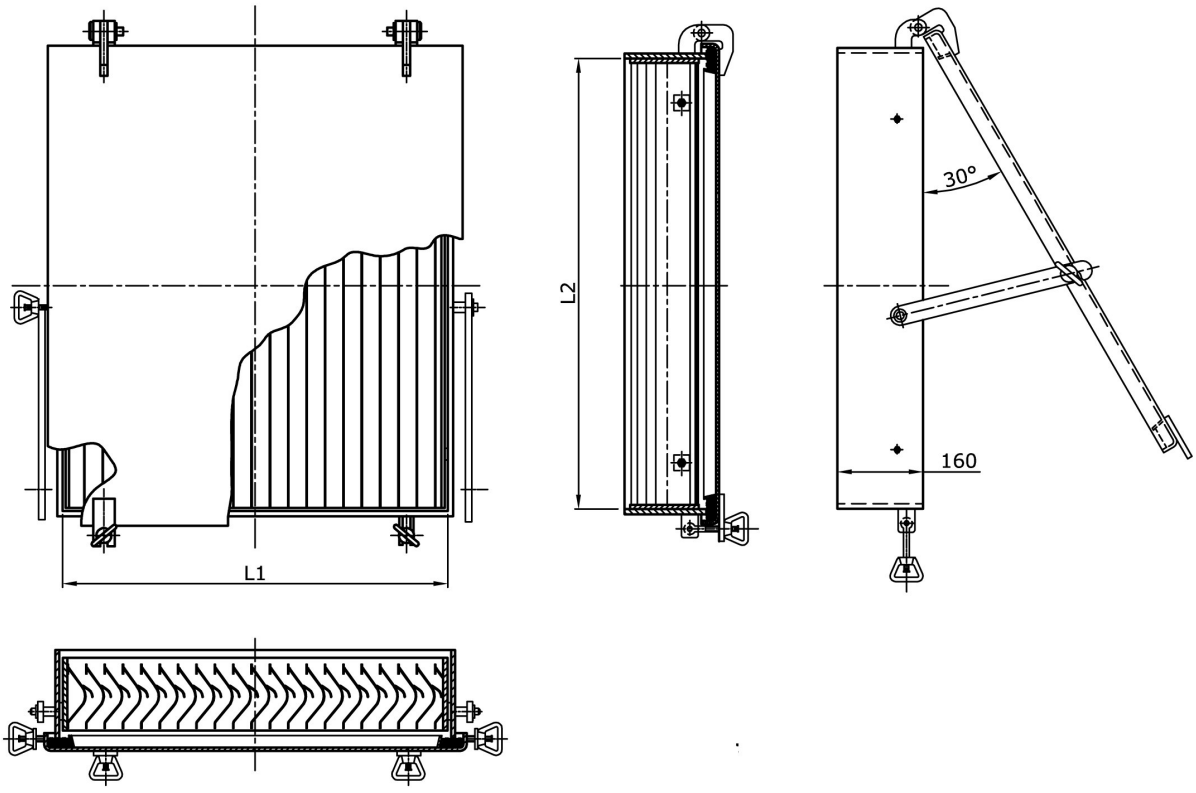

MARKING

Example: louver with tiltable cover, size L_1xL_2=900x500, fittings 4, made of steel: 900x500-4-St

DESCRIPTION

Droplet eliminator louvers with folded weather-tight covers are destined for installation on steel or aluminum walls of superstructure on seagoing ships as air supply units of ventilation systems. Construction is based on standard DIN 83409 norm with significant extending of size range. Louvers are provided with detachable blade frame that makes easy installation as well as access for maintenance. Arrangement of covers provides savings of space required for fitting of cover in open position. Steel louvers frame and cover are painted with marine epoxy paint SWA 7423-013-250, blade frame is hot-dip galvanized. Aluminum louvers do not require any preservation.

TECHNICAL SPECIFICATION & DIMENSIONS

Fittings:
4 – louver with blade frame, without wire gauze
5 – louver with blade frame and wire gauze of 10mm mesh

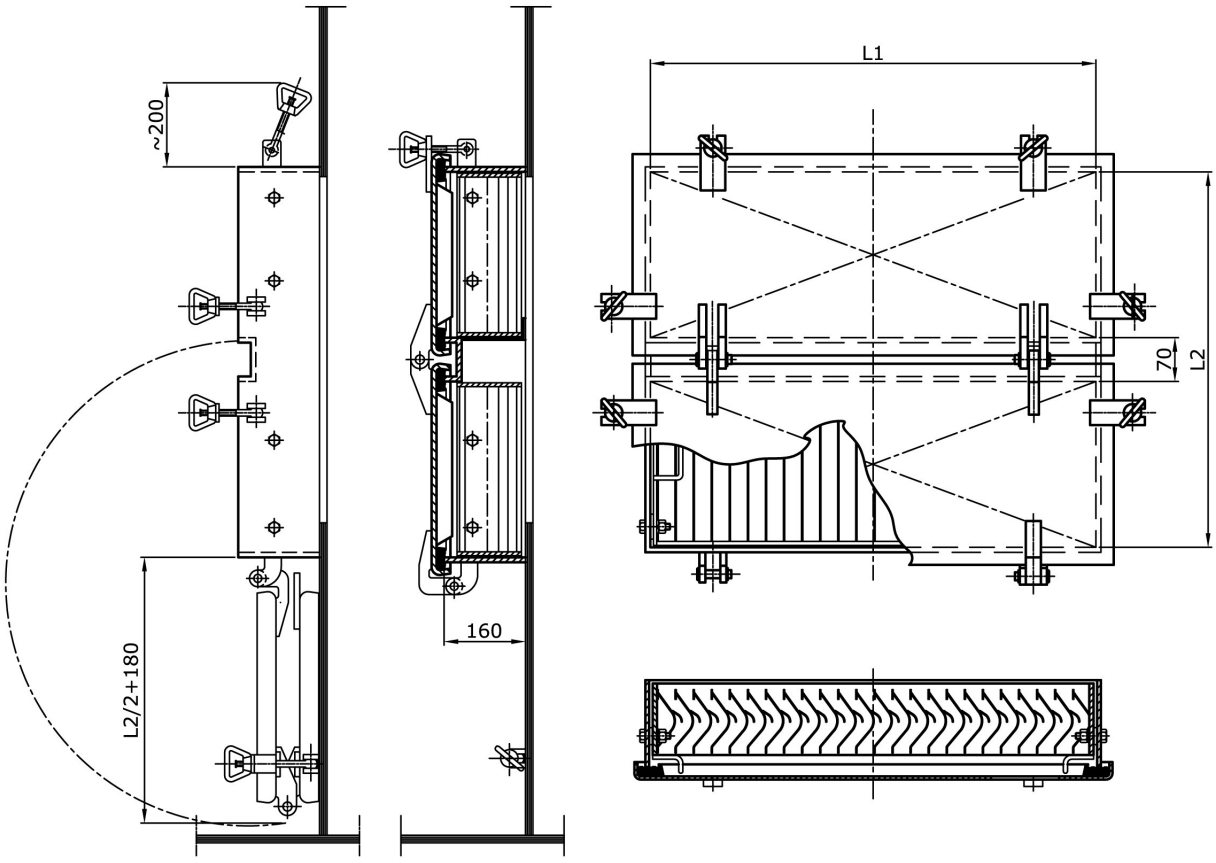

MARKING

Example: droplet eliminator with folded cover, size L_1xL_2=900x500, fittings 4, made of steel: 900x500-4-St

DESCRIPTION

Ventilation louvers with tiltable weather-tight covers are destined for installation on steel or aluminum walls of superstructure on seagoing ships as air supply or exhaust units of ventilation systems. Construction is based on standard DIN 83409 norm with significant extending of size range. Louvers are provided with detachable blade frame that makes easy installation as well as access for maintenance. Arrangement of covers provides an additional protection against rain and sea water splashes as well as savings of space required for fitting of cover in open position. Steel louvers frame and cover are painted with marine epoxy paint SWA 7423-013-250, blade frame is hot-dip galvanized. Aluminum louvers do not require any preservation. Louvers can be delivered with non-standard dimensions on request.

TECHNICAL SPECIFICATION & DIMENSIONS

Fittings:
1 – louver with blade frame, without wire gauze
2 – louver with blade frame and wire gauze of 10mm mesh
3 – louver with wire gauze of 10mm mesh, without blade frame

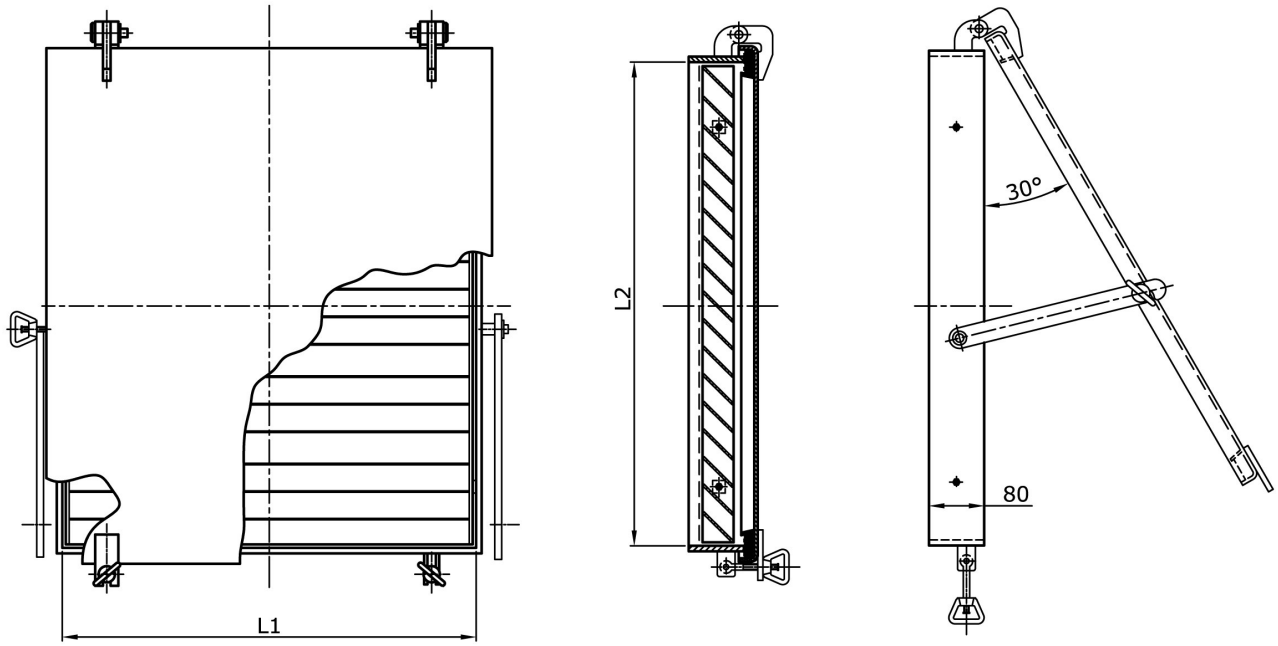

MARKING

Example: louver with tiltable cover, size L_1xL_2=900x500, fittings 2, made of steel: 900x500-2-St

DESCRIPTION

Ventilation louvers with folded weather-tight covers are destined for installation on steel or aluminum walls of superstructure on seagoing ships as air supply or exhaust units of ventilation systems. Construction is based on standard DIN 83409 norm with significant extending of size range. Louvers are provided with detachable blade frame that makes easy installation as well as access for maintenance. Arrangement of covers provides savings of space required for fitting of cover in open position. Steel louvers frame and cover are painted with marine epoxy paint SWA 7423-013-250, blade frame is hot-dip galvanized. Aluminum louvers do not require any preservation.

TECHNICAL SPECIFICATION & DIMENSIONS

Fittings:
1 – louver with blade frame, without wire gauze
2 – louver with blade frame and wire gauze of 10mm mesh
3 – louver with wire gauze of 10mm mesh, without blade frame

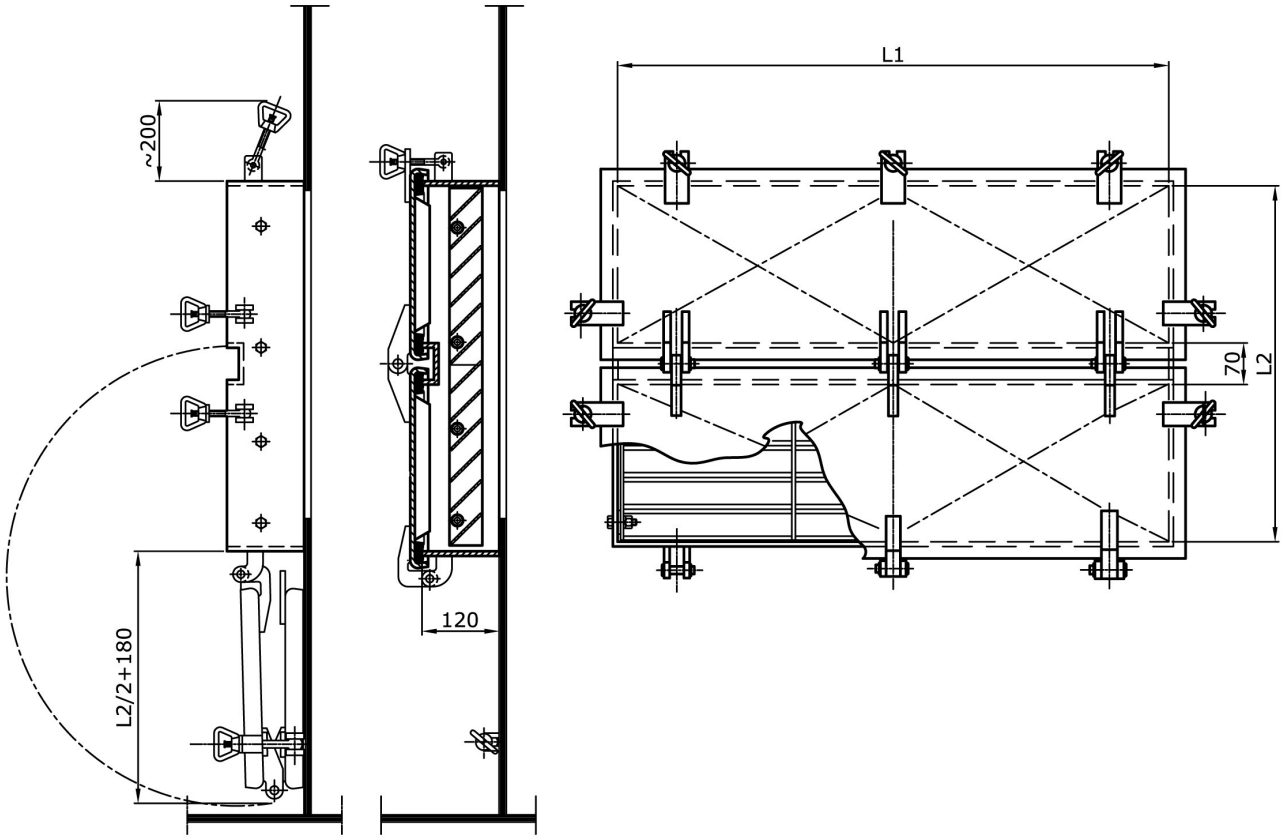

MARKING

Example: louver with folded cover, size L_1xL_2=900x500, fittings 2, made of steel: 900x500-2-St

DESCRIPTION

Marine ventilation louvers with movable blades are destined for installation in ventilation systems of seagoing ships and offshore objects. Louvers may be used as fire closures of main external ventilation openings; however the requirements of the flag administration are to be observed. Louvers consist of flanged, drilled frame and a set of fixed blades as well as a set of movable blades operated manually with lever. Frame, blades and levers are made of mild steel and shafts of blades of stainless steel. Surface: hot-dip galvanized. Preservation with set of marine paints is available on request.

DIMENSIONS

Dimensions [mm]	
B	H
250-1500	250-2550
(each 50mm)	(each 100mm)

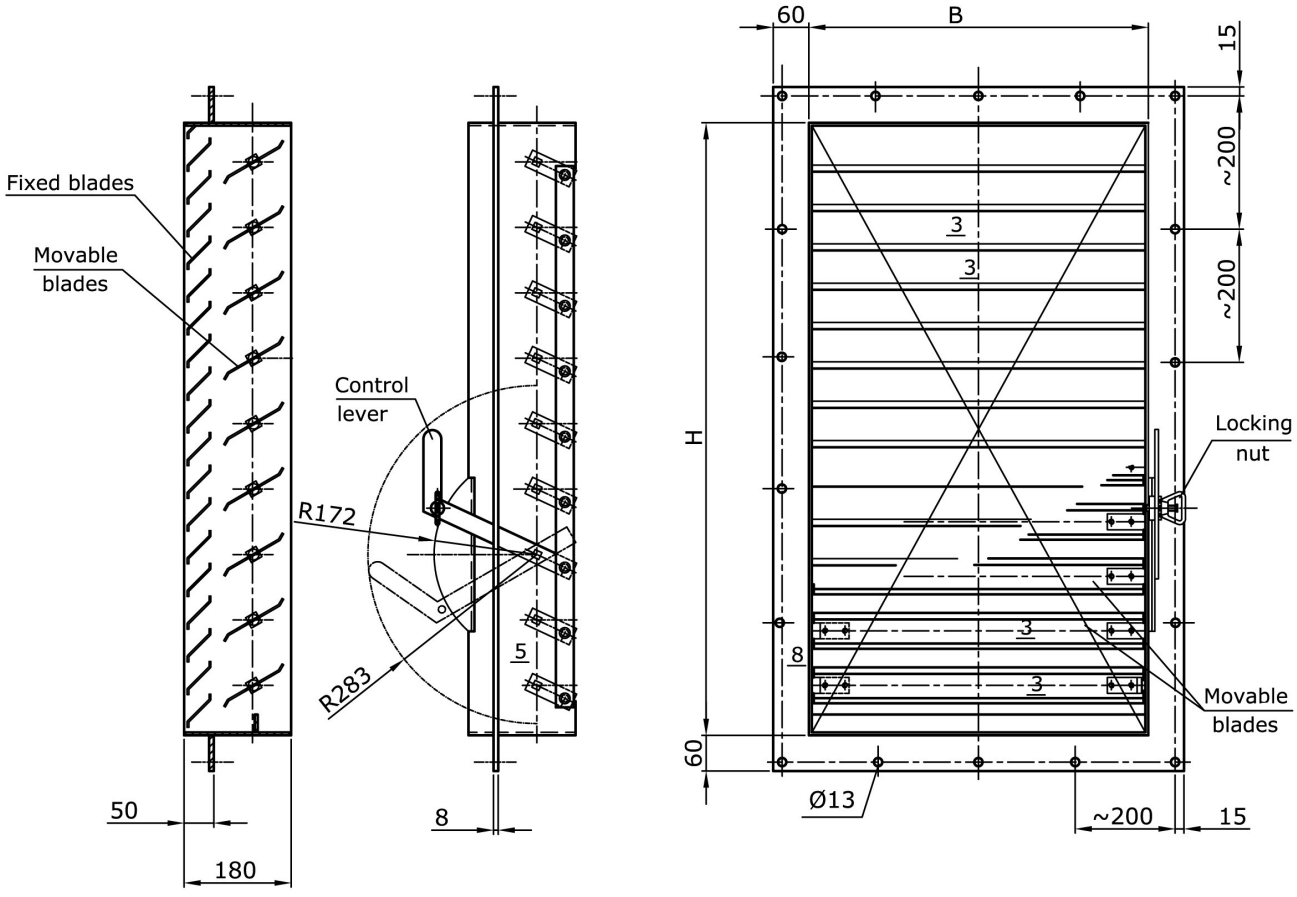

MARKING

Example: of ventilation louver with movable blades of dimension BxH=1000x1550: LOUVER 1000x1550

DESCRIPTION

Remotely controlled marine ventilation louvers with movable blades are destined for installation in ventilation systems of seagoing ships and offshore objects. Louvers may be used as fire closures of main external ventilation openings, however the requirements of the flag administration are to be observed. Louvers consist of flanged, drilled frame and a set of fixed blades as well as a set of movable blades operated manually with lever. Frame, blades and levers are made of mild steel and shafts of blades are made of stainless steel. Surface treatment: hot-dip galvanized. Preservation with set of marine paints is available on request.

DIMENSIONS

Dimensions [mm]		
B	H	L
250-1500	250-2050	max 2000
(each 50mm)	(each 100mm)	

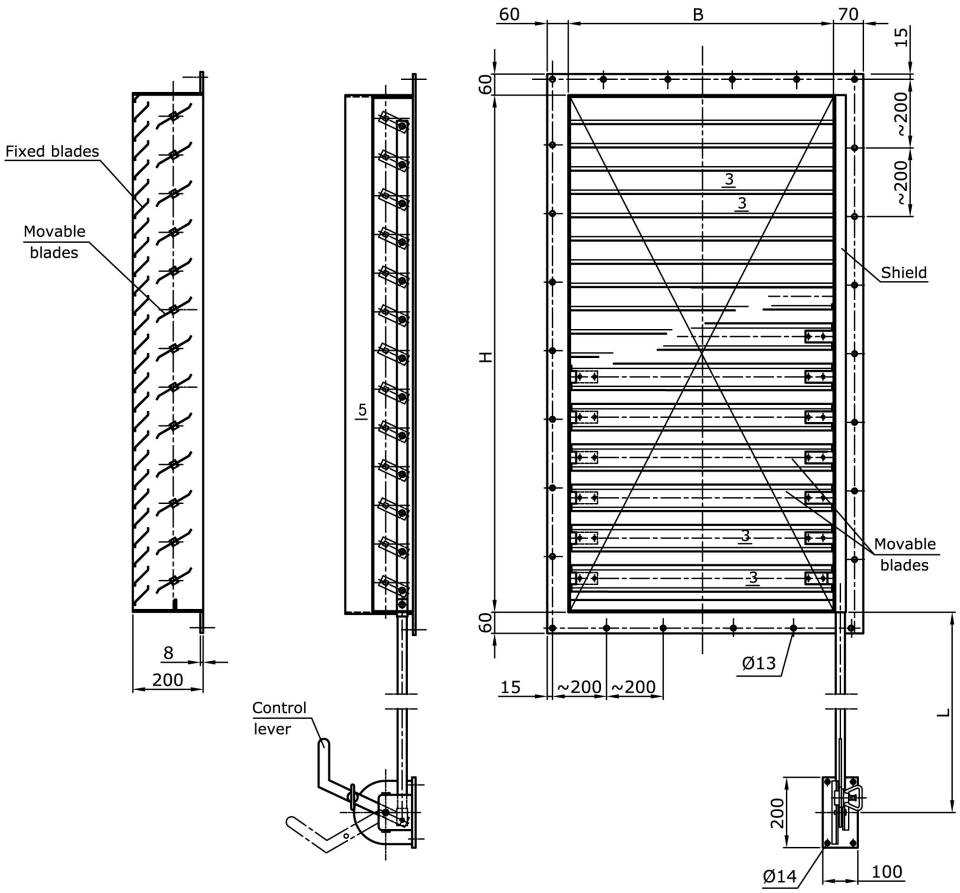

MARKING

Example: of remotely controlled ventilation louver with movable blades of dimension BxHxL=1000x1550x1500: LOUVER 1000x1550-1500

DESCRIPTION

Marine ventilation louver dampers LDF are designed for installation in ventilation systems of seagoing ships and offshore objects. Dampers may be used as functional isolating dampers (light execution) or as fire closure of main external ventilation openings as per SOLAS (heavy execution). Marine ventilations louver dampers LDF consist of mild steel frame and rotary blades actuated by electric or pneumatic actuator (manual control by means of lever available on request). Voltage of working pressure of control air must be specified at order. Louvers are provided with stainless steel wire 13x13mm. Surface treatment: hot-dip galvanized. Preservation with set of marine paints is available on request.

TECHNICAL SPECIFICATION & DIMENSIONS

Executions:
L – light, with frame 3mm and blades 5mm thick
H – heavy, with frame and blades 8mm thick

Drive:
E – electric
P – pneumatic

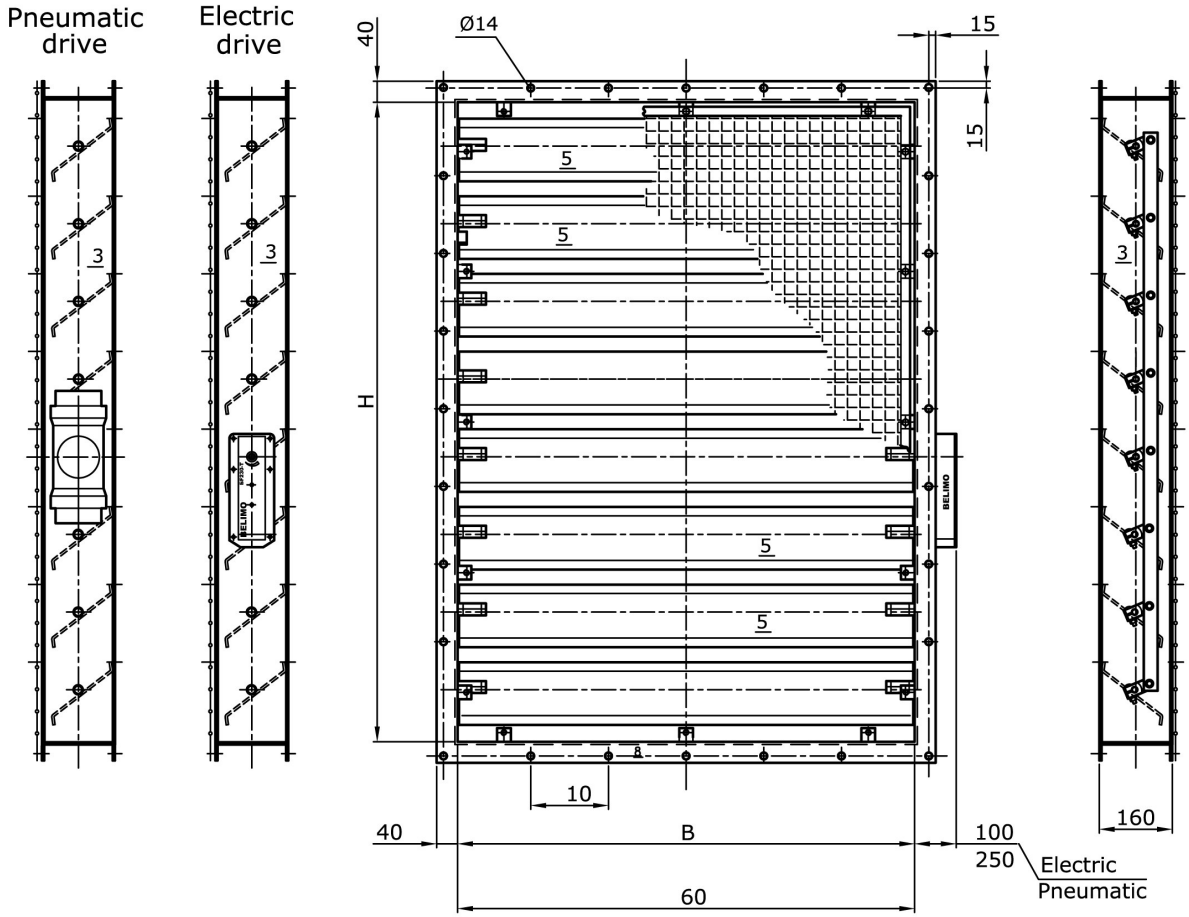

MARKING

Example: marine louver damper LDF type of dimensions BxH=1000x2000, in light execution L, with electric drive: LDF-1000x2000-L-E

DESCRIPTION

Marine ventilation louver dampers LDG are destined for installation in ventilation systems of seagoing ships and offshore objects. Dampers may be used as functional isolating dampers (light execution) or as fire closure of main external ventilation openings as per SOLAS (heavy execution). Marine ventilation louver dampers LDF consist of mild steel frame and rotary blades actuated by electric or pneumatic actuator (manual control by means of lever available on request). Voltage or working pressure of control air should be specified at order. Louvers are provided with stainless steel wire 13x13mm. Surface treatment: hot-dip galvanized. Preservation with set of marine paints is available on request.

TECHNICAL SPECIFICATION & DIMENSIONS

Executions:
L – light, with frame 3mm and blades 5mm thick
H – heavy, with frame and blades 8mm thick

Drive:
E – electric
P – pneumatic

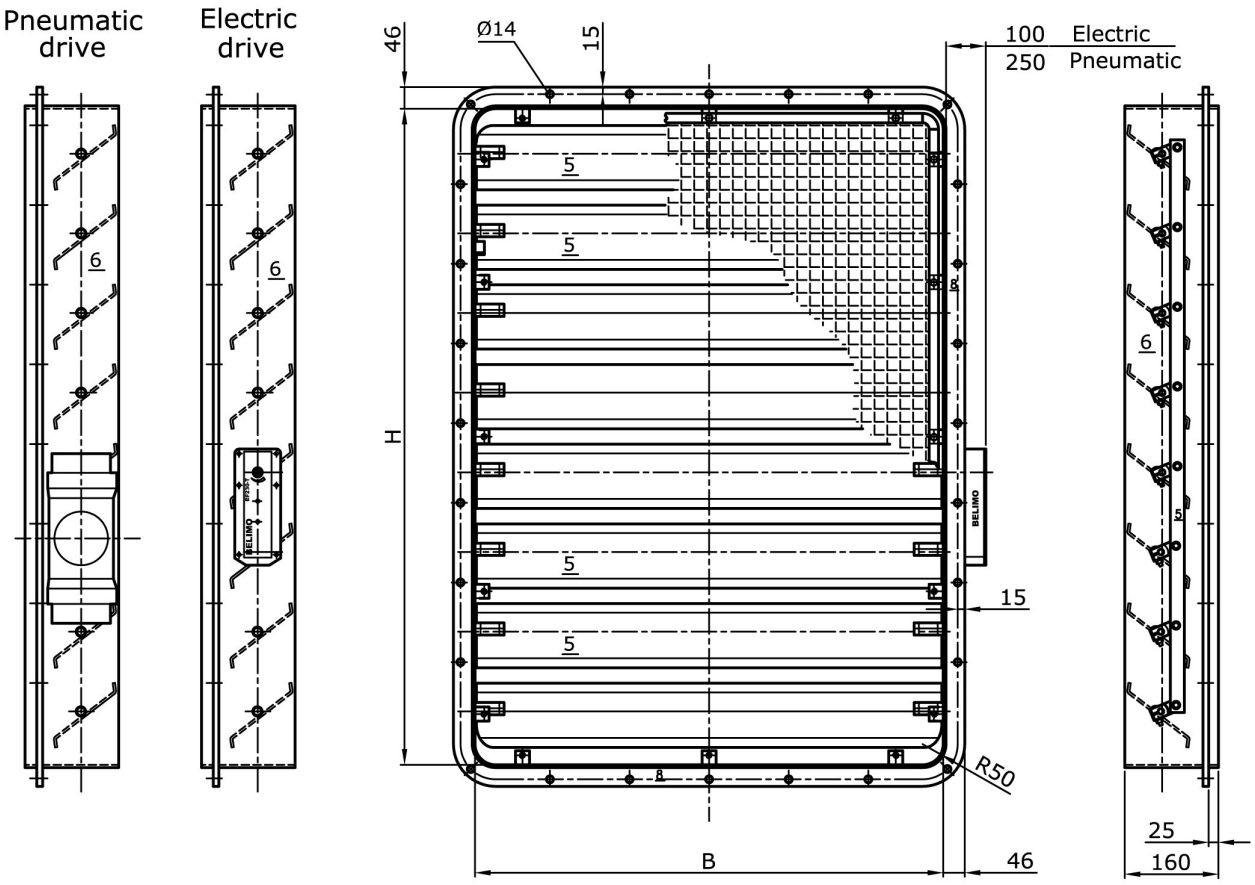

MARKING

Example: marine louver damper LDG type of dimensions BxH=1000x2000, in light execution L, with electric drive: LDG-1000x2000-L-E

DESCRIPTION

Droplet eliminator louvers with air filters AC are destined for installation on steel or aluminum walls of superstructure on seagoing ships as air supply units of ventilation systems. Construction is based on standard DIN 83409 with significant extending of size range. Louvers are provided with detachable blade frame that makes easy installation as well as access for maintenance. After the blades EU3 class air filter is fitted. Material of filter is synthetic fabric. Initial pressure drop against the filter at air face velocity 3m/s is 70Pa (clean filter), recommended final pressure drop 140Pa. Steel louvers frame and cover are painted with marine epoxy paint SWA7423-013-250, blade frame is hot-dip galvanized. Aluminum louvers do not require any preservation.

TECHNICAL SPECIFICATION & DIMENSIONS

Executions:
D – upwards opened cover
E – downwards opened cover
F – cover opened to the left
G – cover opened to the right

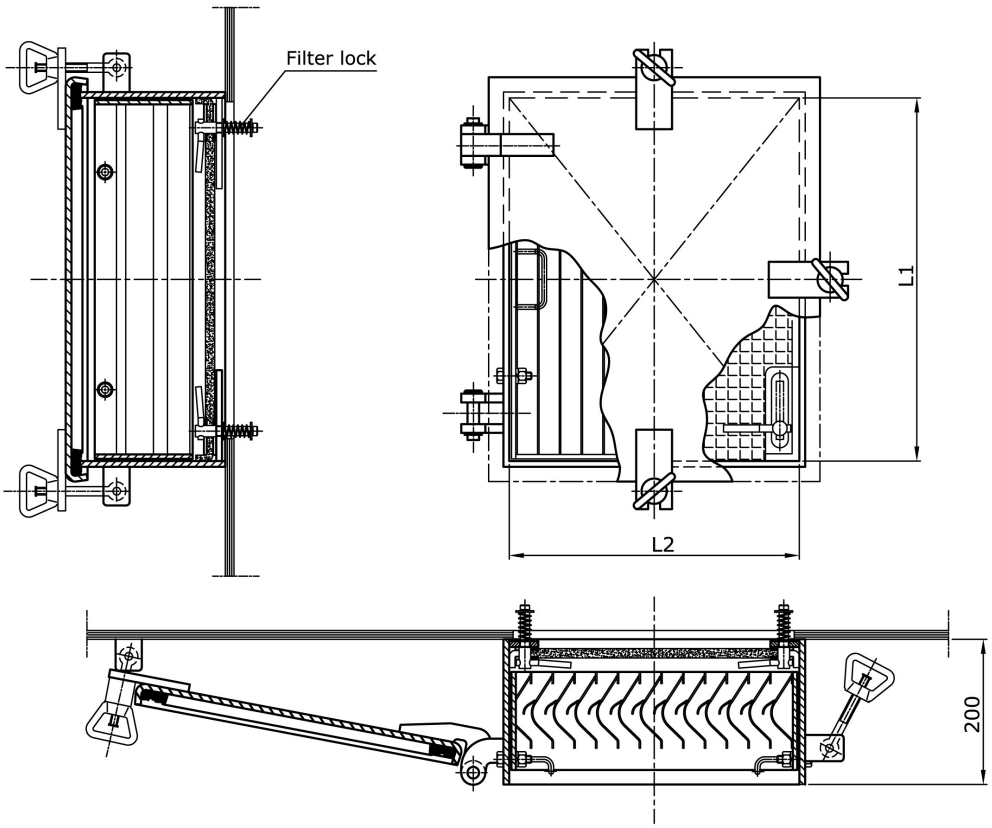

MARKING:

Example: louver with AC filter, size L_1xL_2=900x500, execution F, made of steel: 900x500-AC-F-St

DESCRIPTION

Droplet eliminator louvers with air filters AF are destined for installation on steel or aluminum walls of superstructure on seagoing ships as air supply units of ventilation systems. Construction is based on standard DIN 83409 with significant extending of size range. Louvers are provided with detachable blade frame that makes easy installation as well as access for maintenance. After the blades EU3 class air filter is fitted. Material of filter is synthetic fabric. Initial pressure drop against the filter at air face velocity 6m/s is 140Pa (clean filter), recommended final pressure drop 210Pa. Steel louvers frame and cover are painted with marine epoxy paint SWA7423-013-250, blade frame hot-dip galvanized. Aluminum louvers do not require any preservation.

TECHNICAL SPECIFICATION & DIMENSIONS

Executions:
D – upwards opened cover
E – downwards opened cover
F – cover opened to the left
G – cover opened to the right

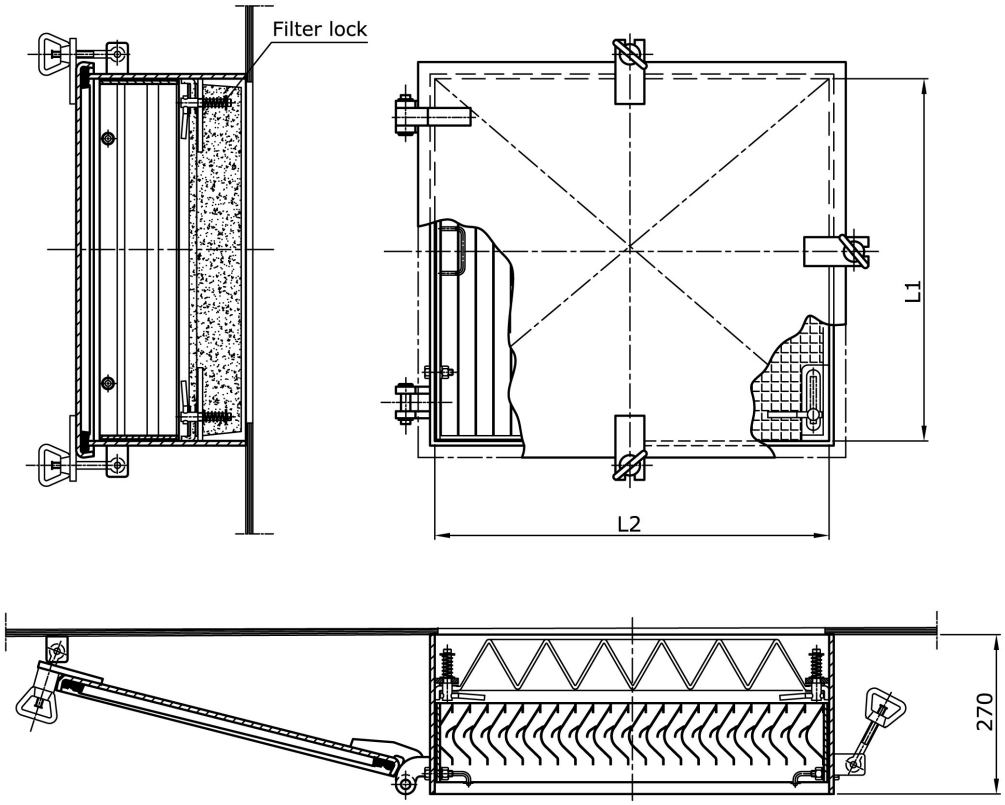

MARKING:

Example: louver with AF filter, size L_1xL_2=900x500, execution F, made of steel: 900x500-AF-F-St

DESCRIPTION

These marine ventilation louvers VLA types are especially design to external air intakes or outlets of ventilation systems on seagoing ships and offshore objects. They are made of mild steel, hot-dip galvanized.

DIMENSIONS

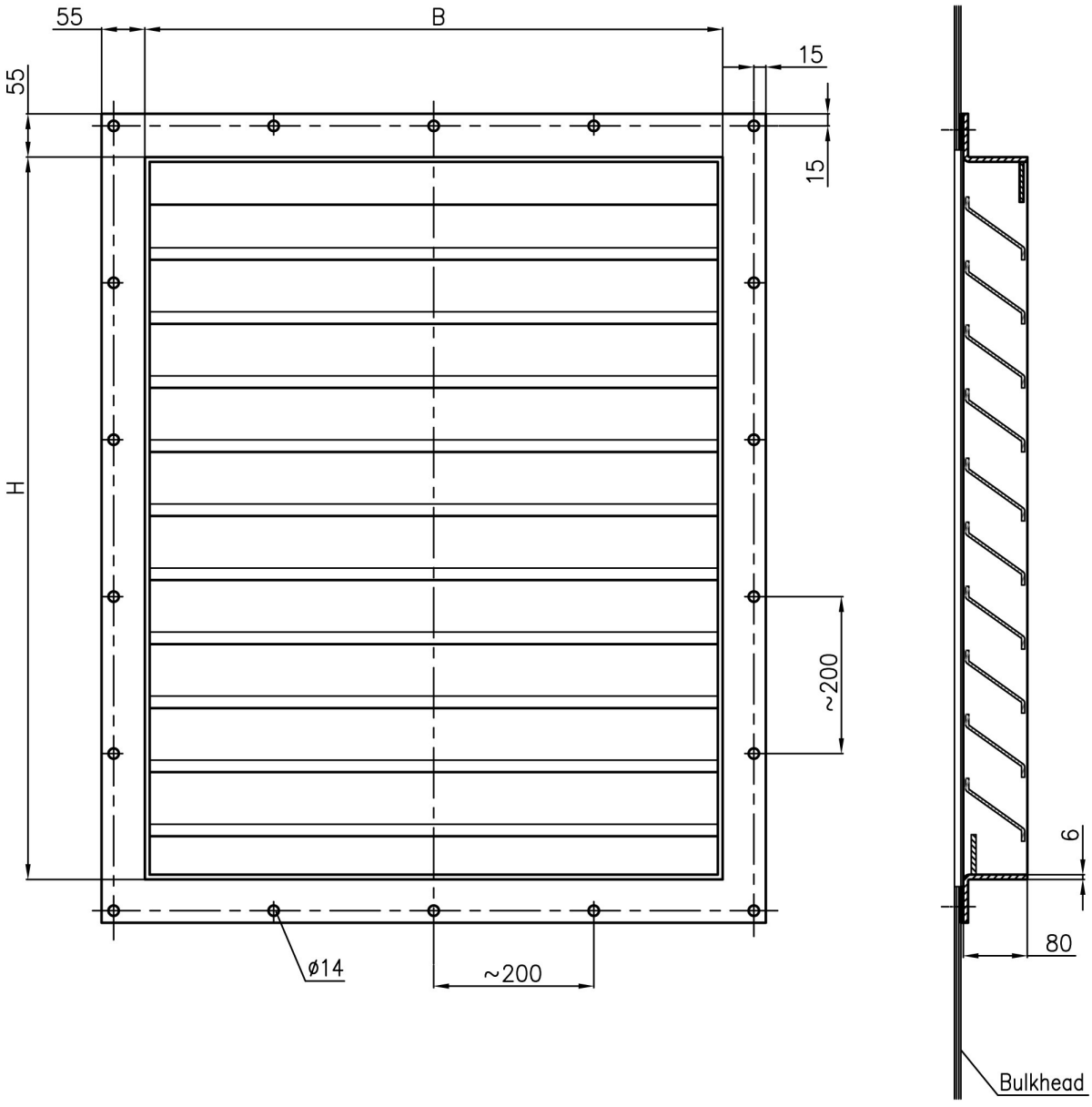

MARKING:

Example: VLA type louver of dimension BxH=750x1200: VLA-750x1200

DESCRIPTION

The VLB marine ventilation lovers are designed to external air intakes or outlets of ventilation systems on seagoing ships and offshore objects. The unit is made of mild steel, hot-dip galvanized.

DIMENSIONS

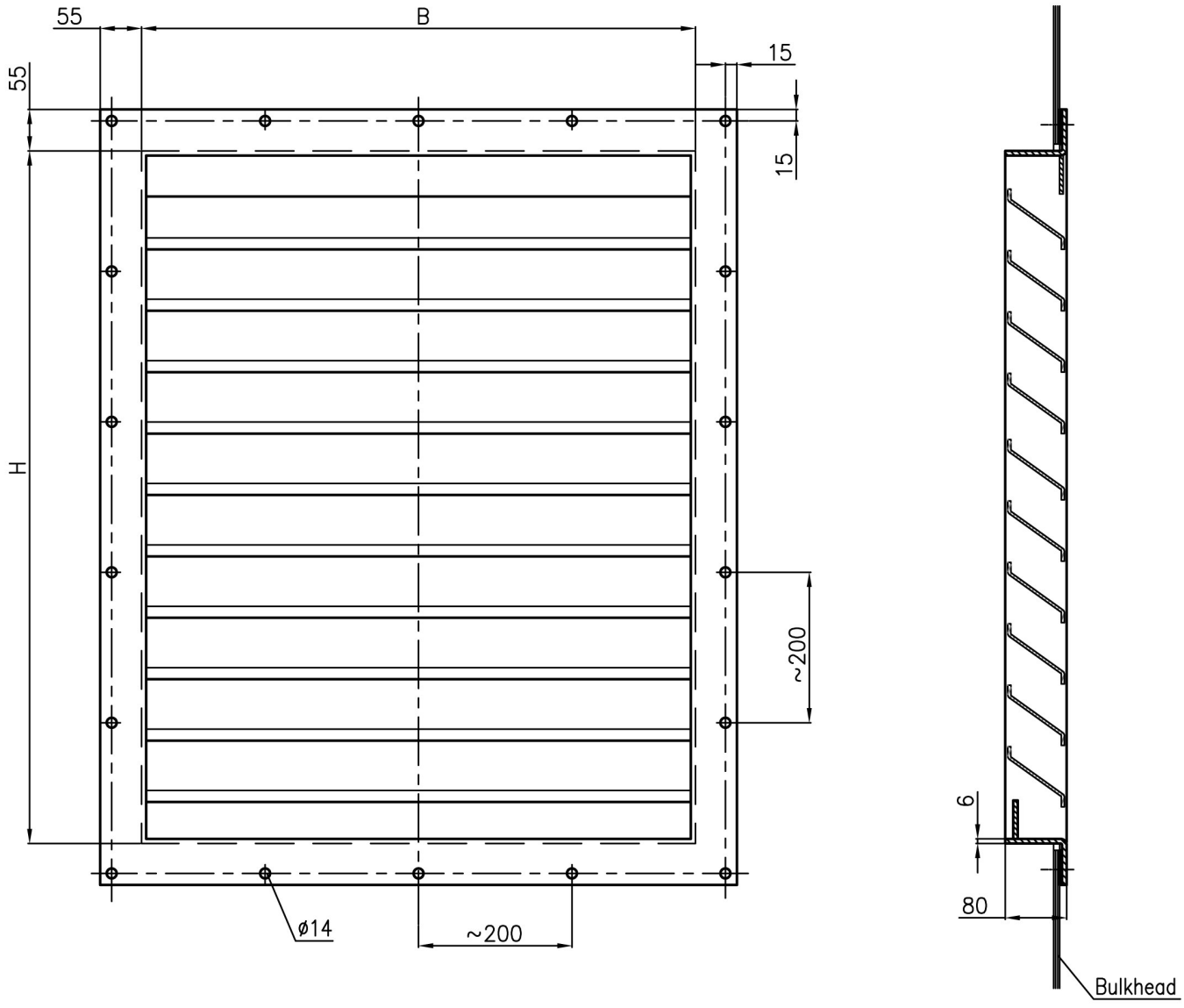

MARKING:

Example: VLB type louver of dimension BxH=750x1200: VLB-750x1200

DESCRIPTION

The VLH marine ventilation louvers are designed to external air intakes or outlets of ventilation systems on seagoing ships and offshore objects. Louver is provided with weather-tight hatch. Casing, hatch and blades are made of mild steel, hot-dip galvanized. Shafts and bolts are made of stainless steel 316L and swing-out nuts of brass.

DIMENSIONS

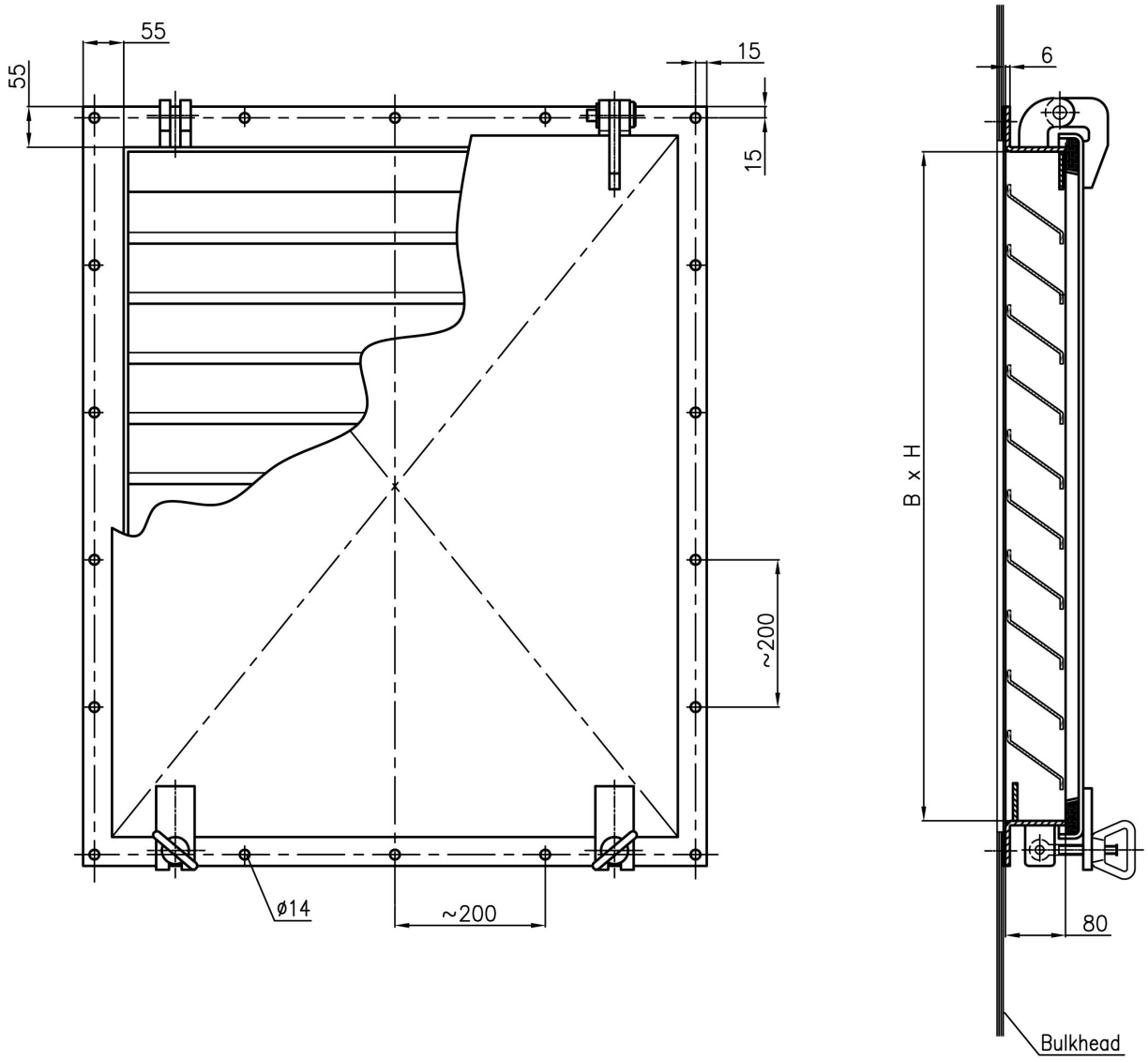

MARKING:

Example: VLH type louver of dimension BxH=750x1200: VLH-750x1200

DESCRIPTION

The VLD marine ventilation louvers are designed to external air intakes or outlets of ventilation systems on seagoing ships and offshore objects. The louvers are provided with shut-off damper. Casing is made of mild steel, hot-dip galvanized. Damper blades, shafts and bolts are made of stainless steel 316L.

DIMENSIONS

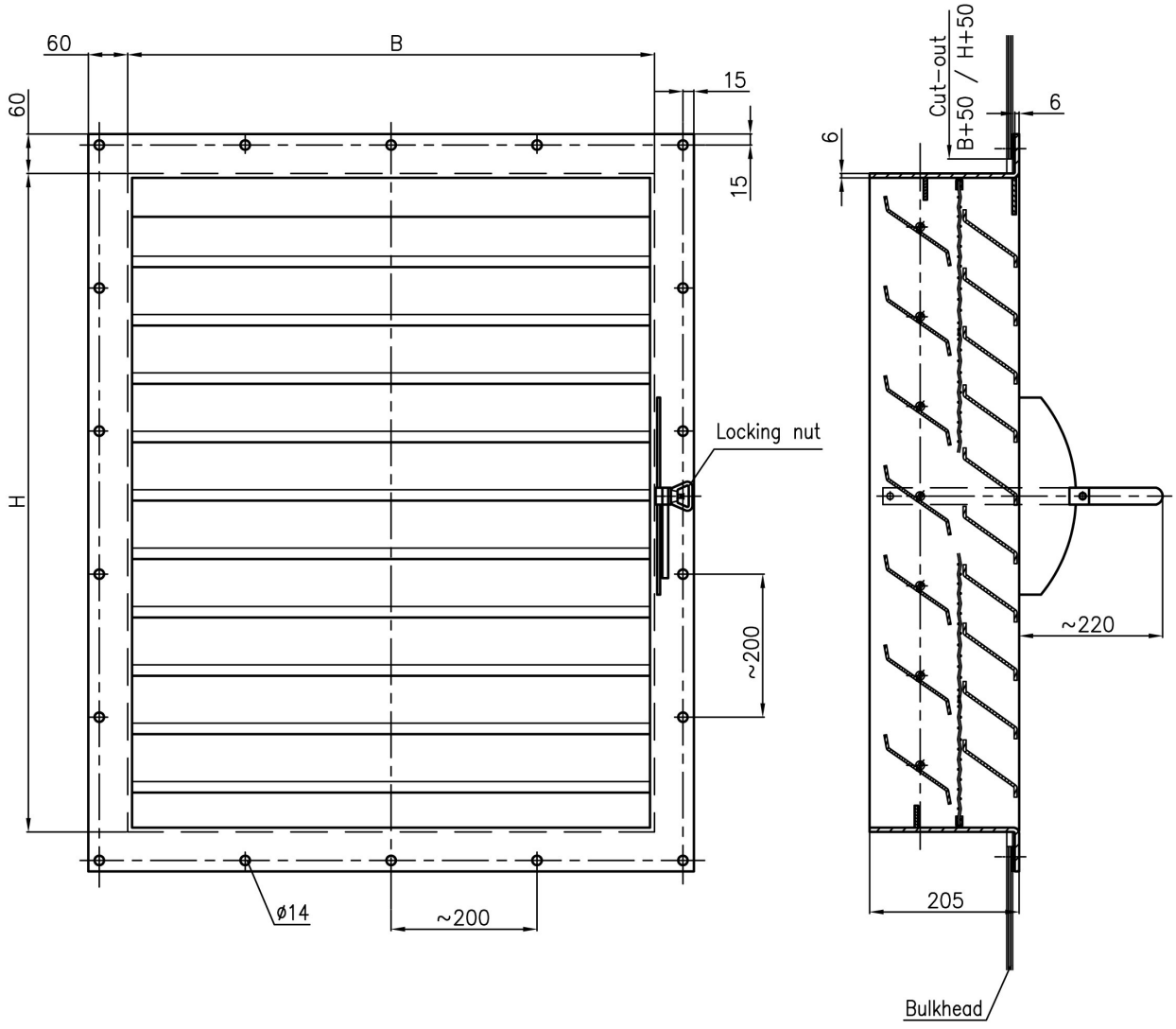

MARKING:

Example: VLD type louver of dimension BxH=750x1200: VLD-750x1200

DESCRIPTION

The DSA marine droplet separators are designed to external air intakes of ventilation systems on seagoing ships and offshore objects. Casing is made of mild steel, hot-dip galvanized. Droplet separator profiles – stainless steel.

DIMENSIONS

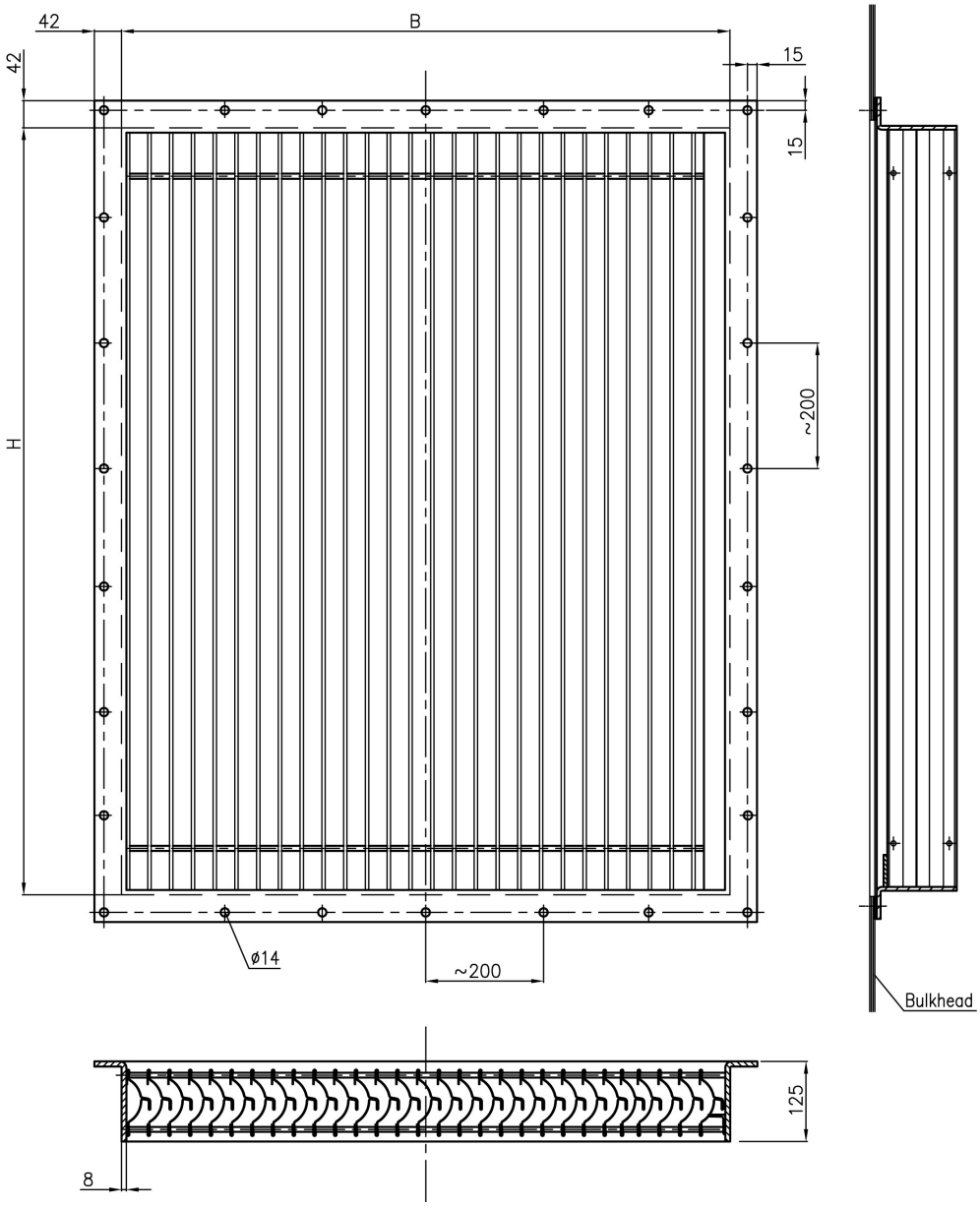

MARKING:

Example: DSA type louver of dimension BxH=750x1200: DSA-750x1200

DESCRIPTION

The DSA1 type marine droplet separators are design to external air intakes of ventilation systems on seagoing ships and offshore objects. Casing is made of mild steel, hot-dip galvanized. Droplet separator profiles are made of stainless steel.

DIMENSIONS

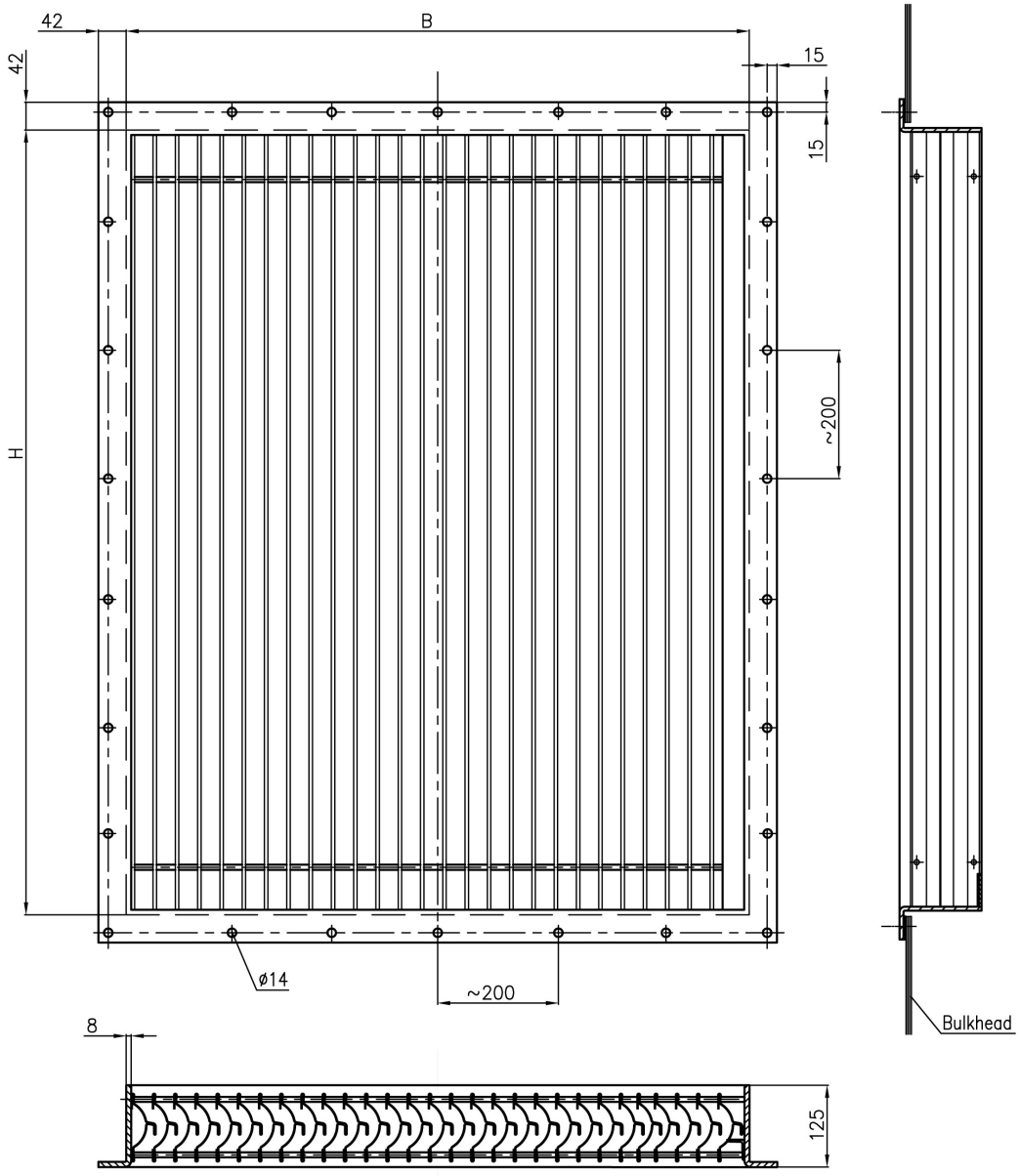

MARKING:

Example: DSA1 type louver of dimension BxH=750x1200: DSA1-750x1200

DESCRIPTION

The marine droplet separator DSH is designed to external air intakes of ventilation systems on seagoing ships and offshore objects. Separator is provided with weather-tight hatch. Casing, hatch and blades are made of mild steel, hot-dip galvanized. Droplet separator profiles are made of stainless steel and shafts and bolts of stainless steel 316L. Swing-out nuts – brass.

DIMENSIONS

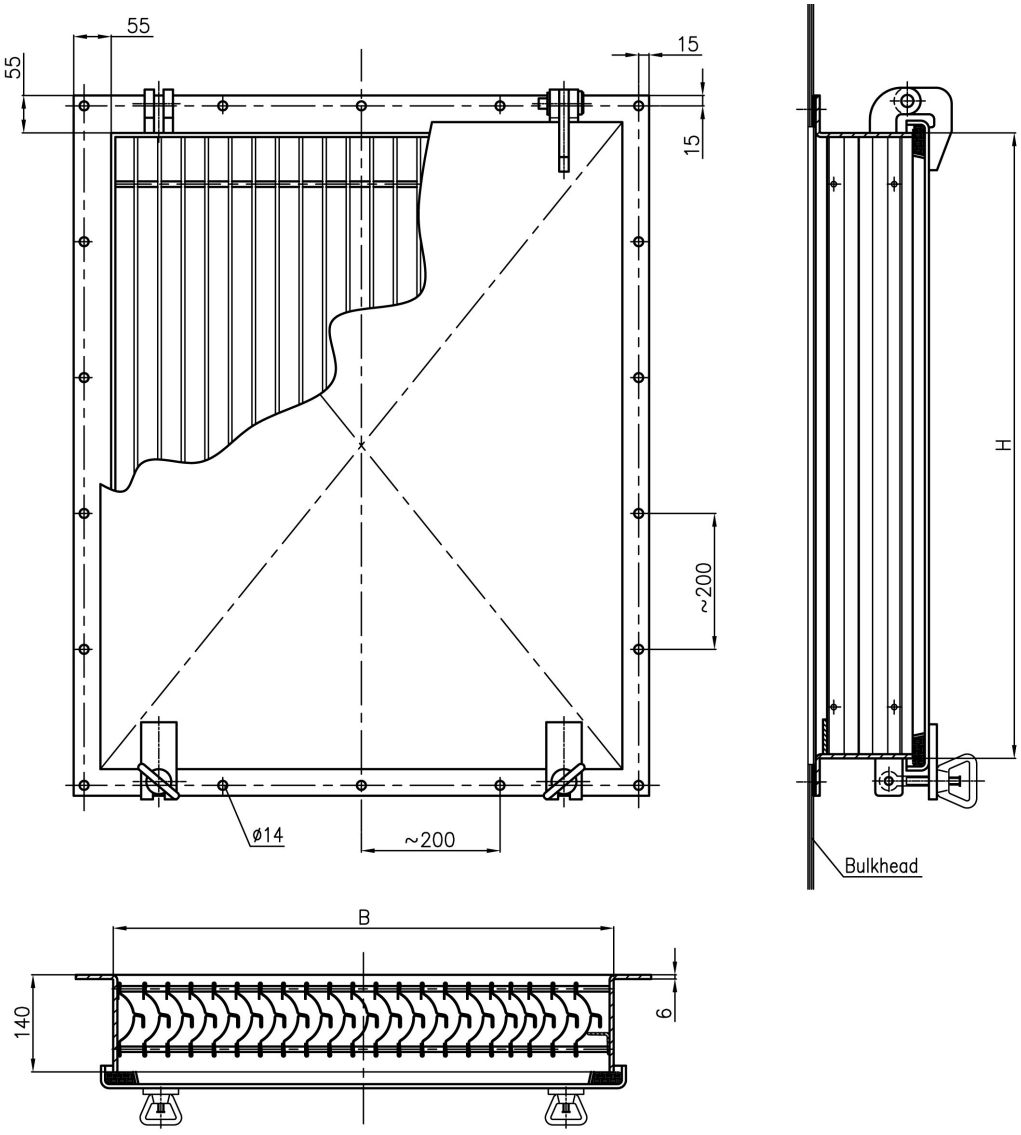

MARKING:

Example: DSH type louver of dimension BxH=750x1200: DSH-750x1200

DESCRIPTION

The DSD marine ventilation louvers are designed to external air intakes of ventilation systems on seagoing ships and offshore objects. The units are provided with shut-off damper. Casing is made of mild steel, hot-dip galvanized, droplet separator profiles of stainless steel and damper blades, shafts and bolts of stainless steel 316L.

DIMENSIONS

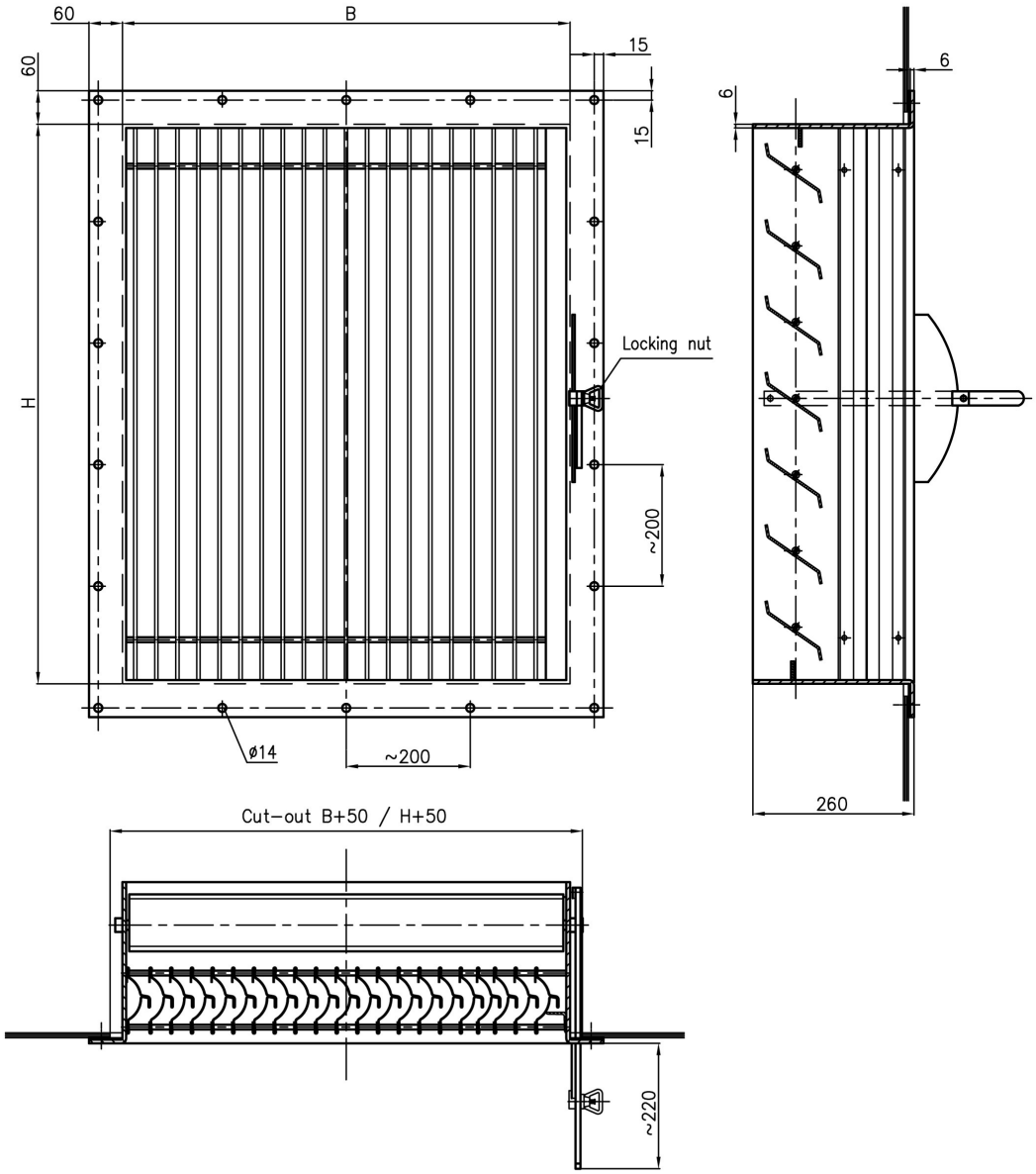

MARKING:

Example: DSD type louver separator of dimension BxH=750x1200: DSD-750x1200

Certificate

Germanischer Lloyd Polen Sp. z o.o. Warsaw Division, 00-876 Warsaw, 58 Ogrodowa St.
herewith certifies that the company

Teknotherm Marine HVAC Sp. z o.o.

51 Wyspiańskiego St., PL-70-497 Szczecin, Poland

has established and maintains a Quality Management System relevant for:

Design, delivery, technical consulting and installation of air conditioning, ventilation and refrigeration systems for sea vessels and offshore units.

Germanischer Lloyd Polen Sp. z o.o. Warsaw Division has audited the company. Evidence was provided that the Quality Management System fulfills the requirements of the following standard:

ISO 9001:2008

The certificate is valid from **21.06.2012** until **15.05.2014**

Warsaw, 21.06.2012

Issue 2. Certified since May 2011

Certificate no. **QMS – 394 GL**

Dagmara Żygowska

PCA
Polskie Centrum Akredytacji
Certyfikacja Systemów Zarządzania
AC 112
QMS

TEKNOTHERM
MARINE HVAC

Szczecin, Poland: +48 91 433 18 00
St. Petersburg, Russia: +7 812 325 38 14
Istanbul, Turkey: +90 533 332 83 97

www.teknotherm.pl

tmh@teknotherm.no

GL ISO 9001
GL Systems Certification

© Copyright 2013 Teknotherm Marine HVAC Sp. z o.o.
Teknotherm Marine HVAC Sp. z o.o. reserves the right to change or modify the content of Product Catalogue with or without notice.